CITY OF ALPHARETTA, GEORGIA
DESIGN STANDARDS INDEX

THE CITY OF ALPHARETTA GEORGIA

BY	REVISION	DATE

COVER SHEET

08/01/2015

INDEX

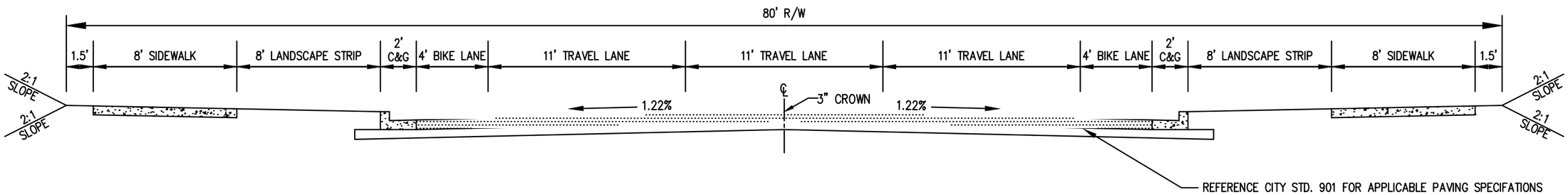

THE CITY OF ALPHARETTA GEORGIA

BY	REVISION	DATE

COMPLETE STREETS:
COLLECTOR STREET

08/01/2015

STD. 100

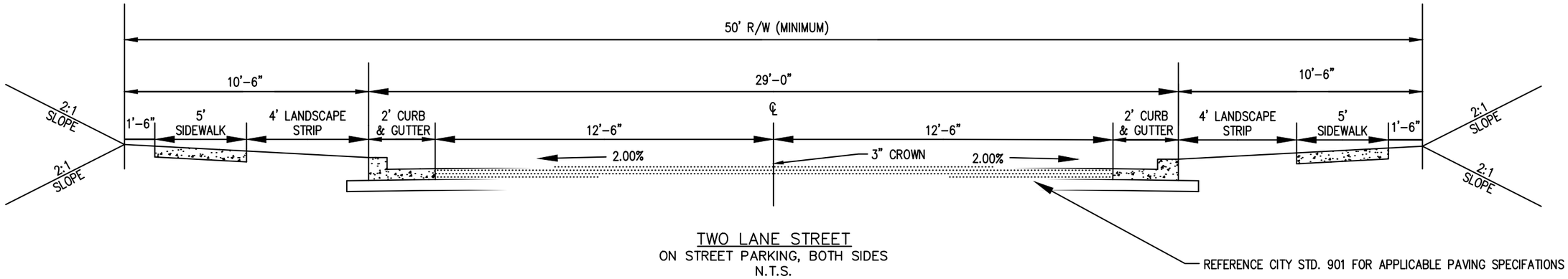

TWO LANE STREET
ON STREET PARKING, BOTH SIDES
N.T.S.

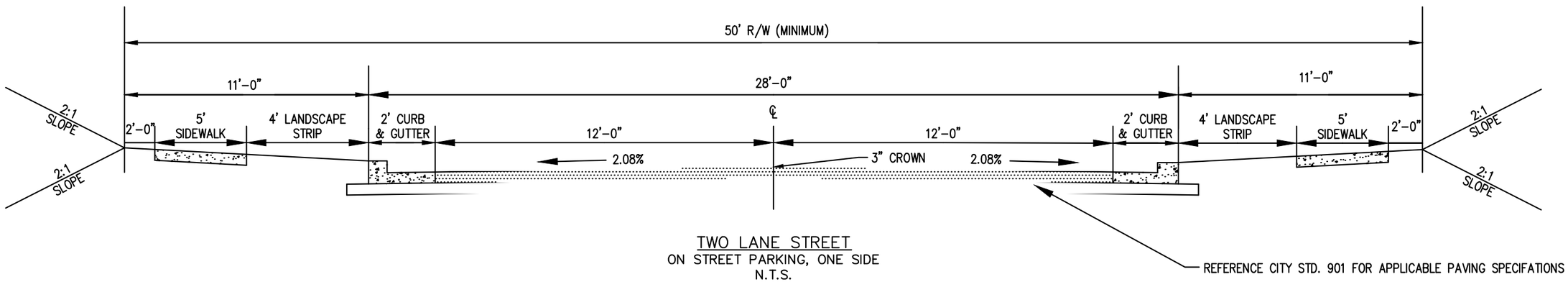

TWO LANE STREET
ON STREET PARKING, ONE SIDE
N.T.S.

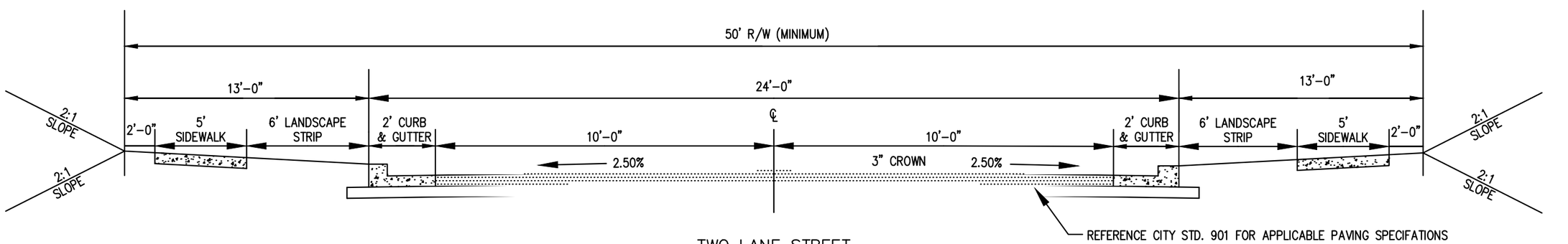

TWO LANE STREET
NO ON STREET PARKING
N.T.S.

THE CITY OF ALPHARETTA GEORGIA

BY	REVISION	DATE

TWO LANE STREETS,
50' RIGHT OF WAY

08/01/2015

STD. 101

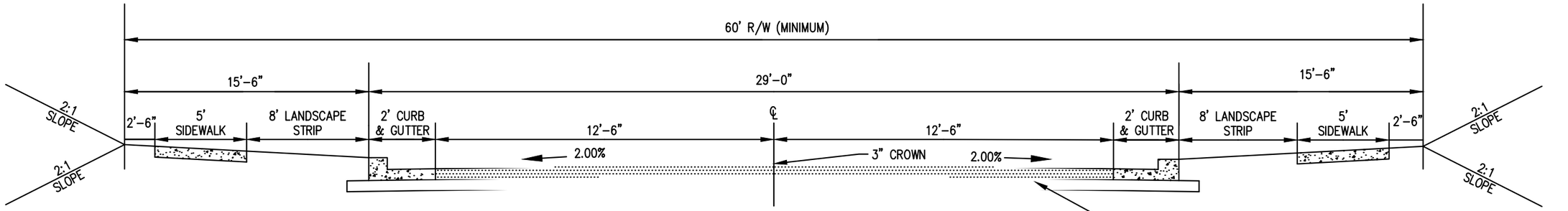

TWO LANE STREET
ON STREET PARKING, BOTH SIDES
N.T.S.

REFERENCE CITY STD. 901 FOR APPLICABLE PAVING SPECIFATIONS

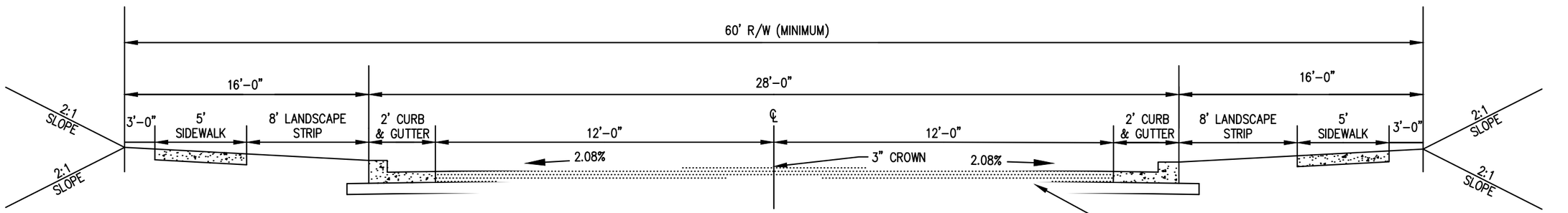

TWO LANE STREET
ON STREET PARKING, ONE SIDE
N.T.S.

REFERENCE CITY STD. 901 FOR APPLICABLE PAVING SPECIFATIONS

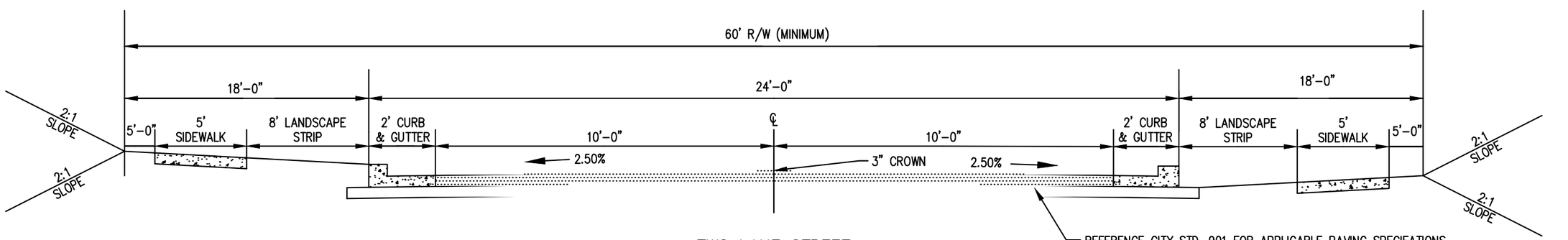

TWO LANE STREET
NO ON STREET PARKING
N.T.S.

REFERENCE CITY STD. 901 FOR APPLICABLE PAVING SPECIFATIONS

THE CITY OF ALPHARETTA GEORGIA

BY	REVISION	DATE

TWO LANE STREETS,
60' RIGHT OF WAY

08/01/2015

STD. 102

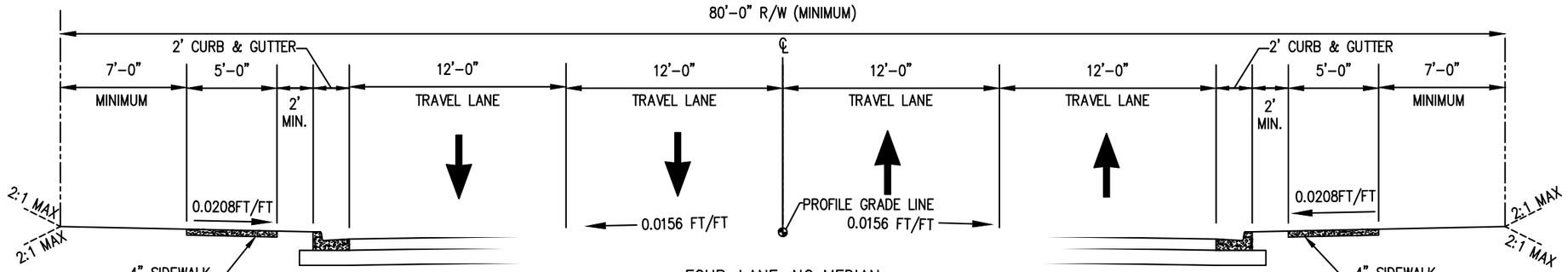

FOUR-LANE, NO MEDIAN
N.T.S.

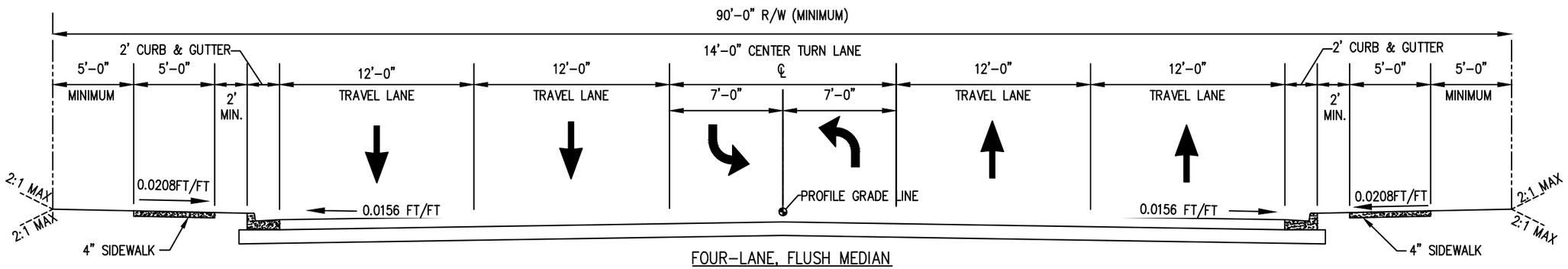

FOUR-LANE, FLUSH MEDIAN
N.T.S.

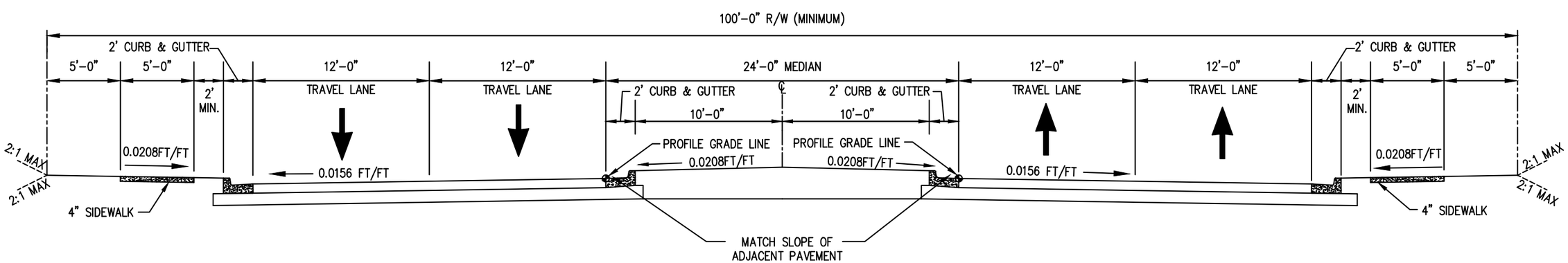

FOUR-LANE, RAISED MEDIAN
N.T.S.

THE CITY OF
ALPHARETTA
GEORGIA

BY	REVISION	DATE

FOUR LANE STREET,
TYPICAL SECTIONS

08/01/2015

STD. 104

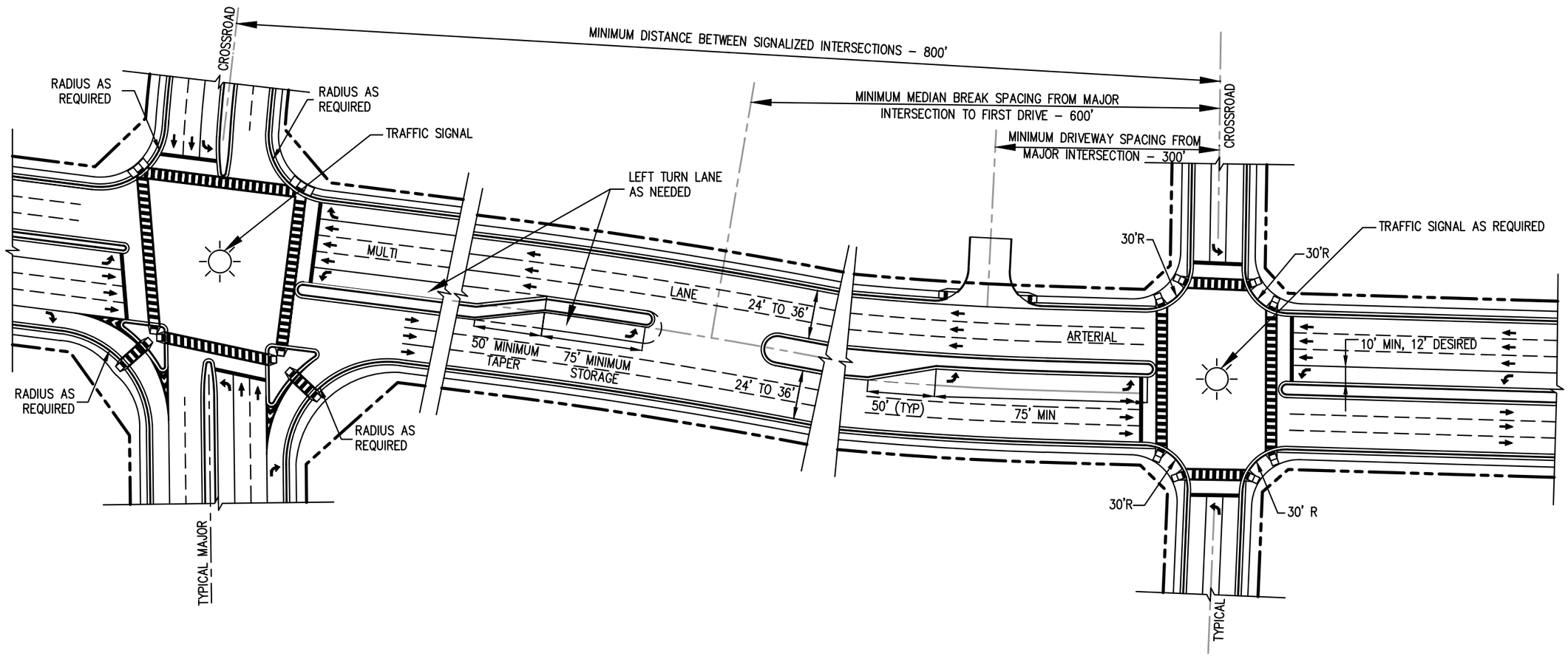

THE CITY OF ALPHARETTA GEORGIA

BY	REVISION	DATE

DRIVEWAY, MEDIAN OPENING SPACING FOR MULTI-LANE STREETS

08/01/2015

STD. 106

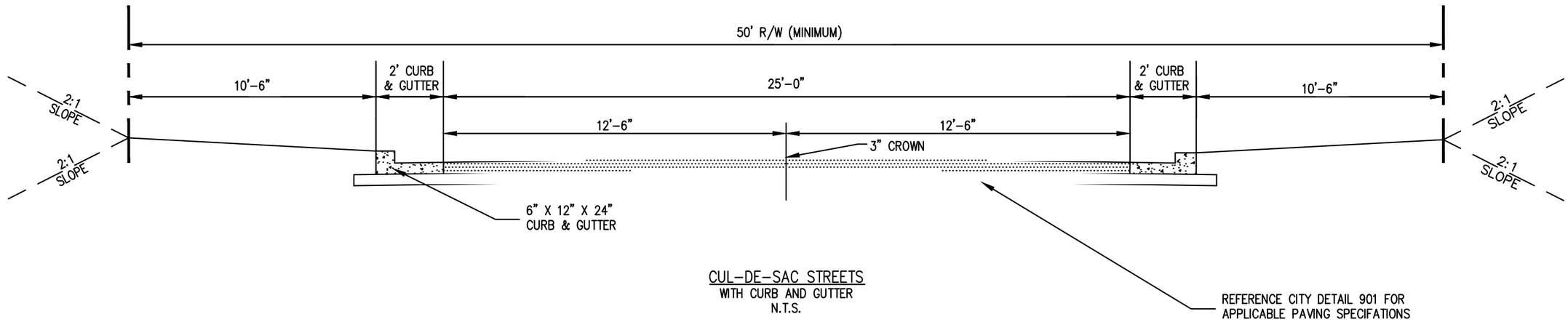

CUL-DE-SAC STREETS
WITH CURB AND GUTTER
N.T.S.

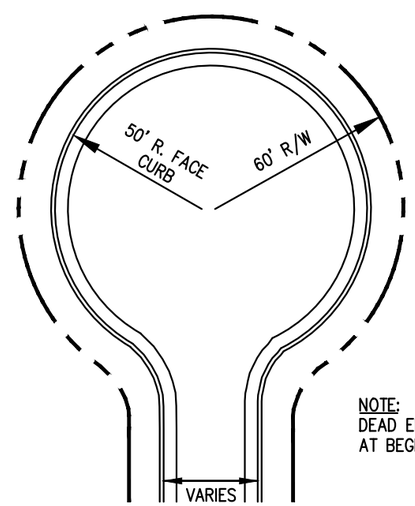

CUL-DE-SAC
N.T.S.

NOTE:
DEAD END SIGN REQUIRED
AT BEGINNING OF STREET

THE CITY OF ALPHARETTA GEORGIA		CUL-DE-SAC STREET
		08/01/2015
		STD. 111
BY	REVISION	DATE

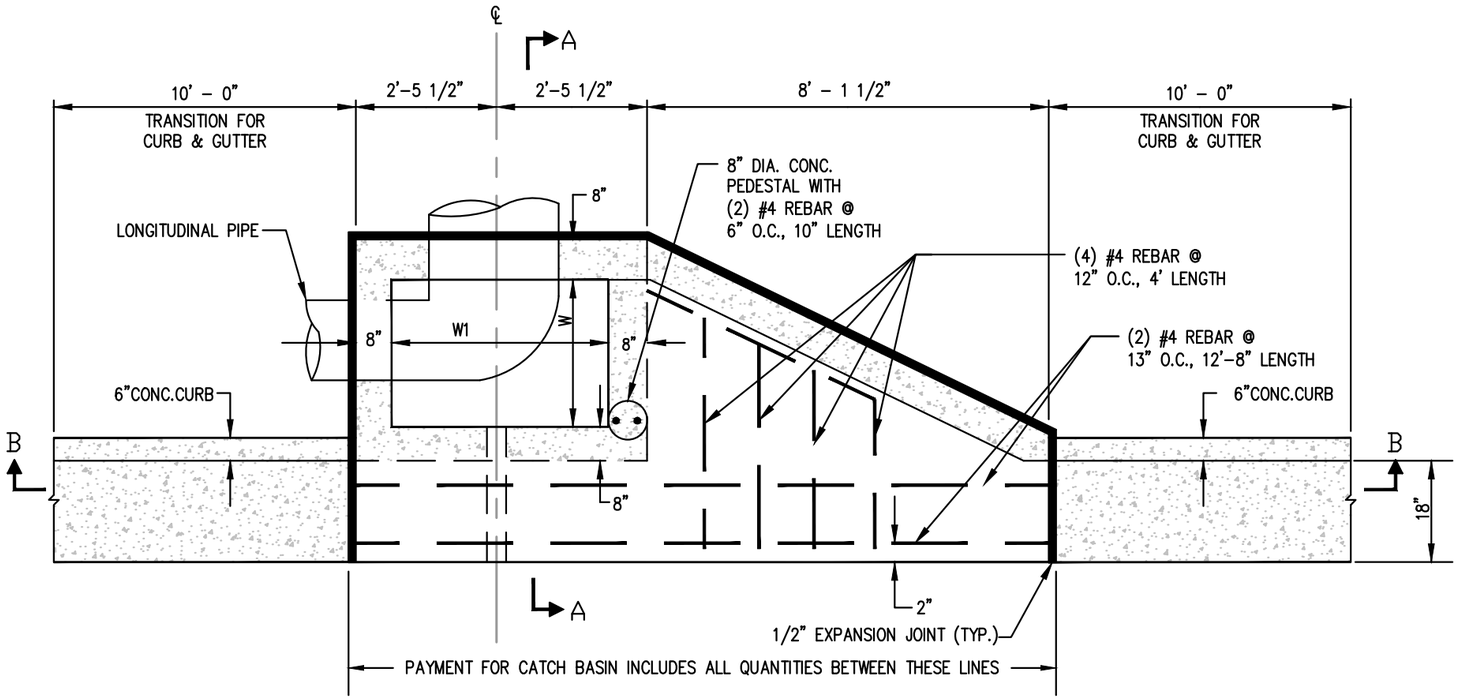

PLAN
TOP OMITTED FOR CLARITY
N.T.S.

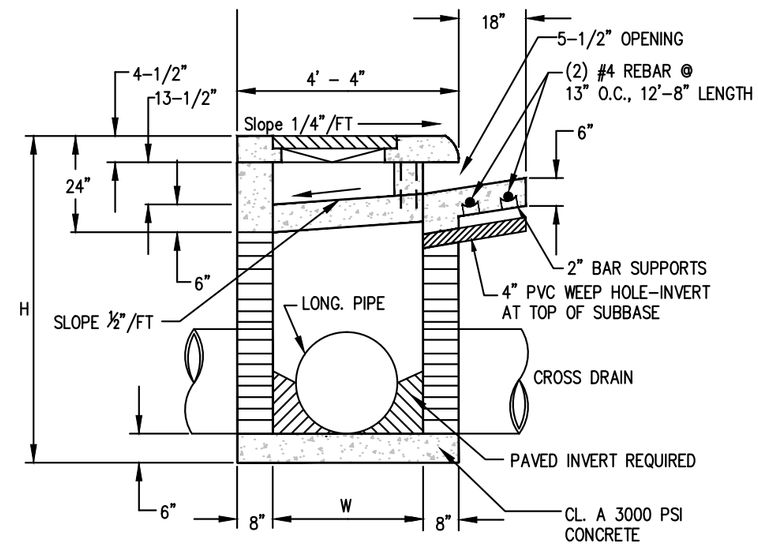

SECTION A–A
N.T.S.

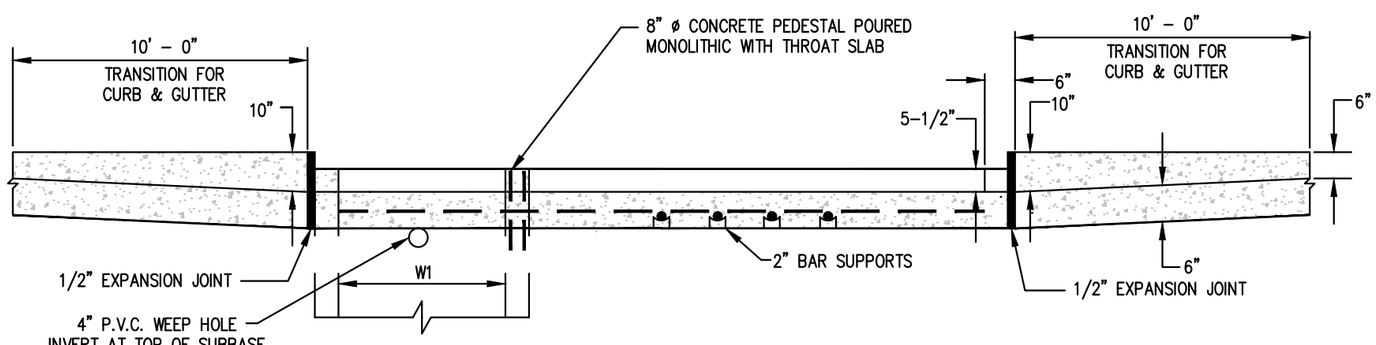

SECTION B–B
TOP OMITTED FOR CLARITY
N.T.S.

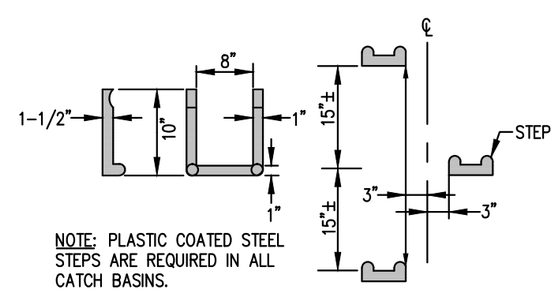

NOTE: PLASTIC COATED STEEL STEPS ARE REQUIRED IN ALL CATCH BASINS.

CATCH BASIN STEP DETAIL
N.T.S.

DIMENSIONS FOR CATCH BASINS		
INSIDE DIAMETER OF PIPE IN INCHES	NORMAL W or W1	Minimum 'H'
18"	3' – 0"	4' – 10"
24"	3' – 0"	5' – 6"
30"	3' – 6"	6' – 2"
36"	4' – 0"	6' – 10"
42"	5' – 0"	7' – 4"
48"	5' – 0"	8' – 0"
54"	6' – 0"	8' – 6"
60"	6' – 0"	9' – 2"

NOTE:
FOR ALL CATCH BASINS, 1/2" EXPANSION JOINT MATERIAL SHALL BE PLACED AROUND THE CATCH BASIN WHERE SIDEWALK CURB OR PAVEMENT IS PLACED ADJACENT TO THE BASIN.

THE CITY OF ALPHARETTA GEORGIA

BY	REVISION	DATE
GS		1/6/16

SINGLE WING
CATCH BASIN

08/01/2015

STD. 200

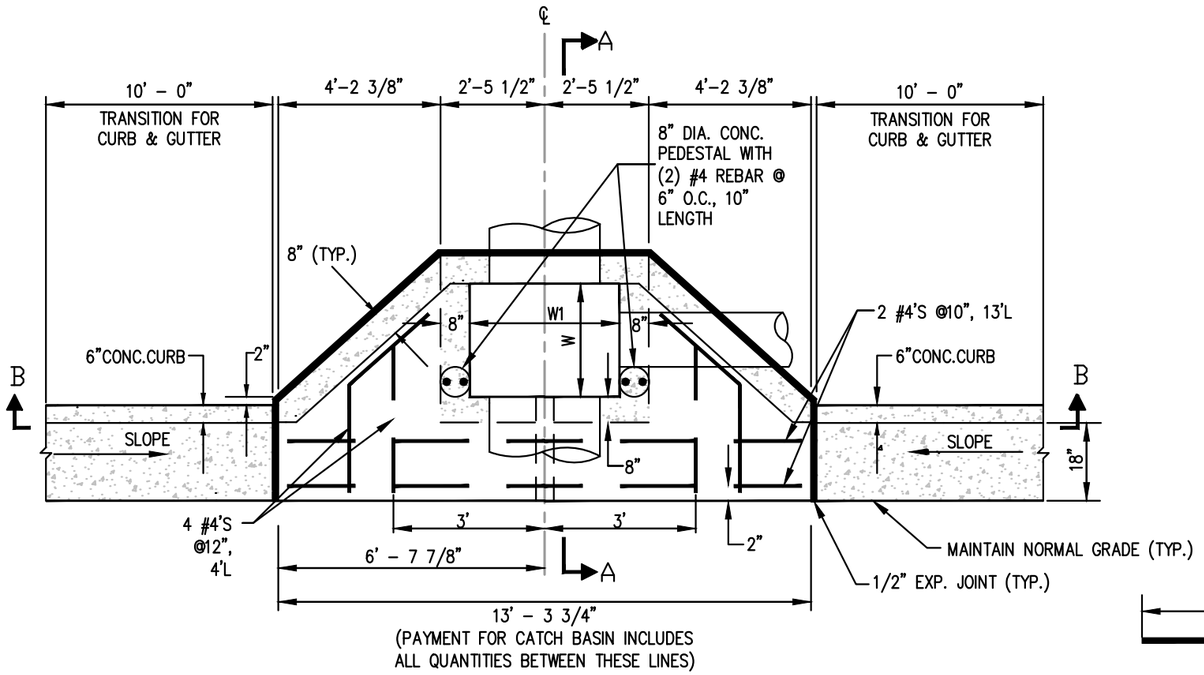

PLAN
TOP OMITTED FOR CLARITY
N.T.S.

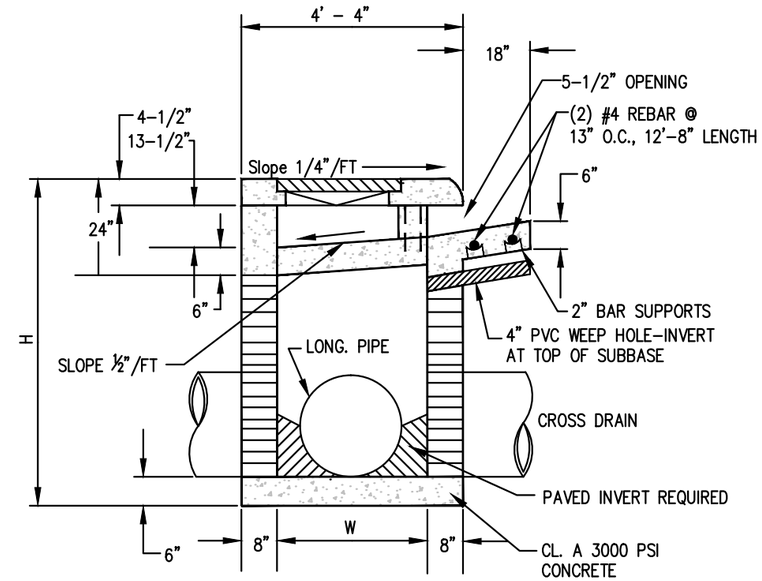

SECTION A–A
N.T.S.

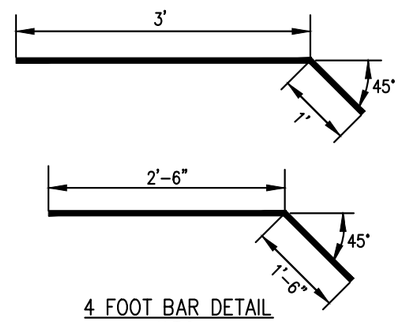

4 FOOT BAR DETAIL
N.T.S.

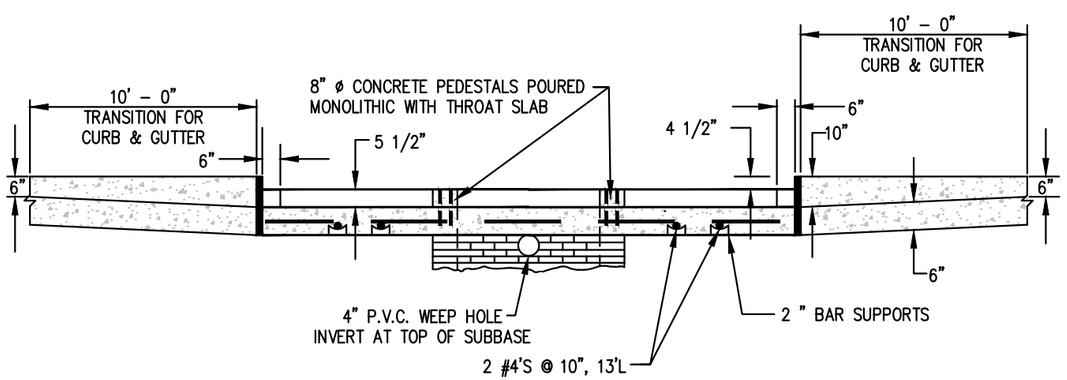

SECTION B–B
N.T.S.

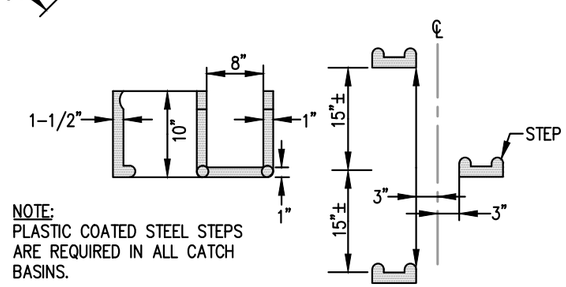

NOTE:
PLASTIC COATED STEEL STEPS
ARE REQUIRED IN ALL CATCH
BASINS.

CATCH BASIN STEP DETAIL
N.T.S.

DIMENSIONS FOR CATCH BASINS		
INSIDE DIAMETER OF PIPE IN INCHES	NORMAL W or W1	Minimum 'H'
18"	3' – 0"	4' – 10"
24"	3' – 0"	5' – 6"
30"	3' – 6"	6' – 2"
36"	4' – 0"	6' – 10"
42"	5' – 0"	7' – 4"
48"	5' – 0"	8' – 0"
54"	6' – 0"	8' – 6"
60"	6' – 0"	9' – 2"

NOTE:
FOR ALL CATCH BASINS, 1/2" EXPANSION JOINT MATERIAL SHALL BE PLACED AROUND THE CATCH BASIN WHERE SIDEWALK CURB OR PAVEMENT IS PLACED ADJACENT TO THE BASIN.

THE CITY OF
ALPHARETTA
GEORGIA

BY	REVISION	DATE
GS		1/6/16

DOUBLE WING
CATCH BASIN

08/01/2015

STD. 201

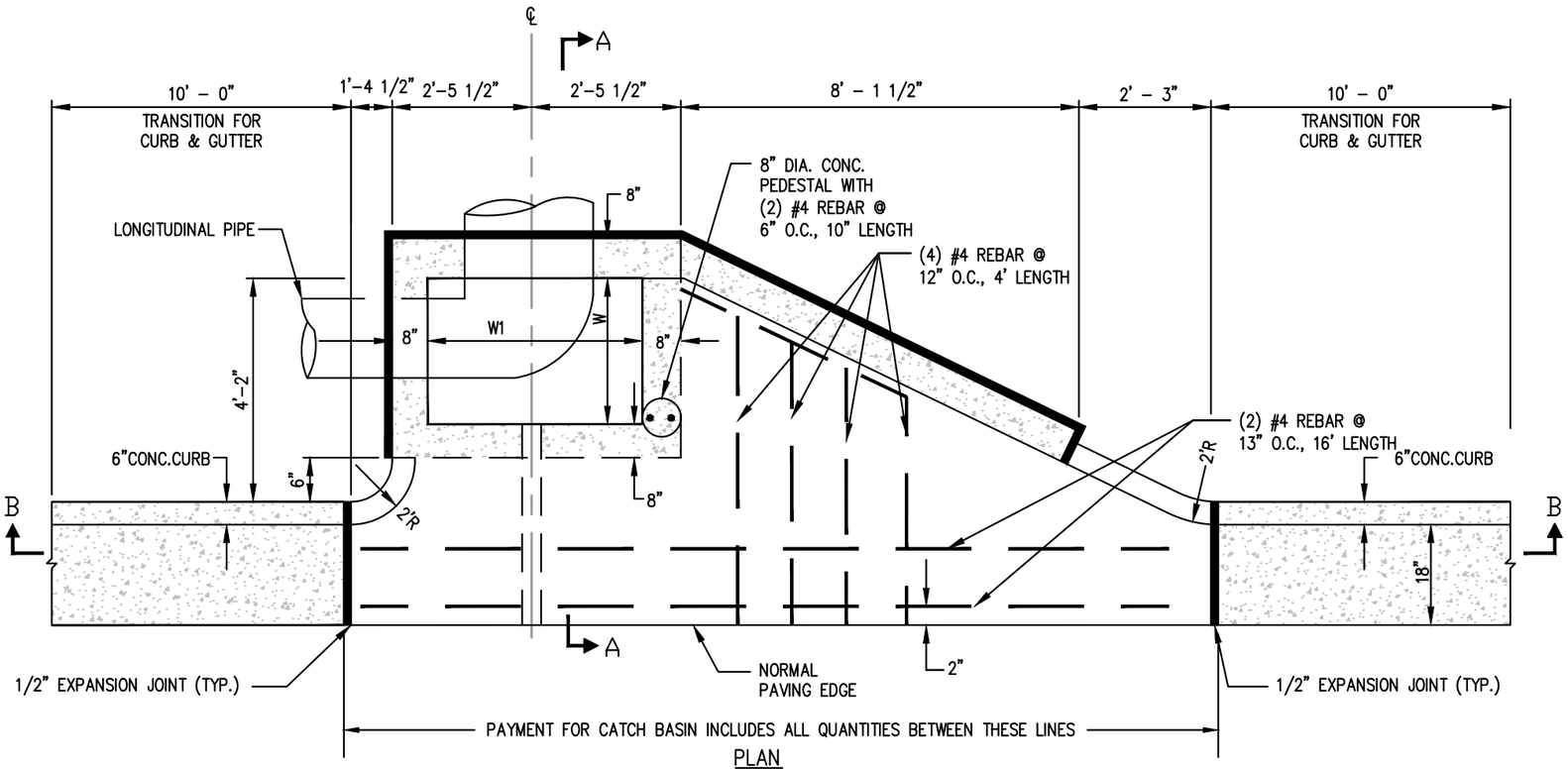

PLAN
TOP OMITTED FOR CLARITY
N.T.S.

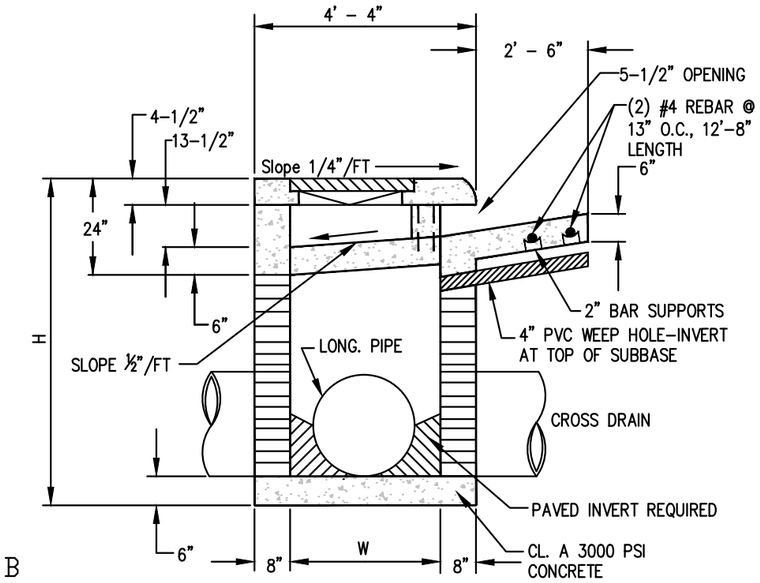

SECTION A–A
N.T.S.

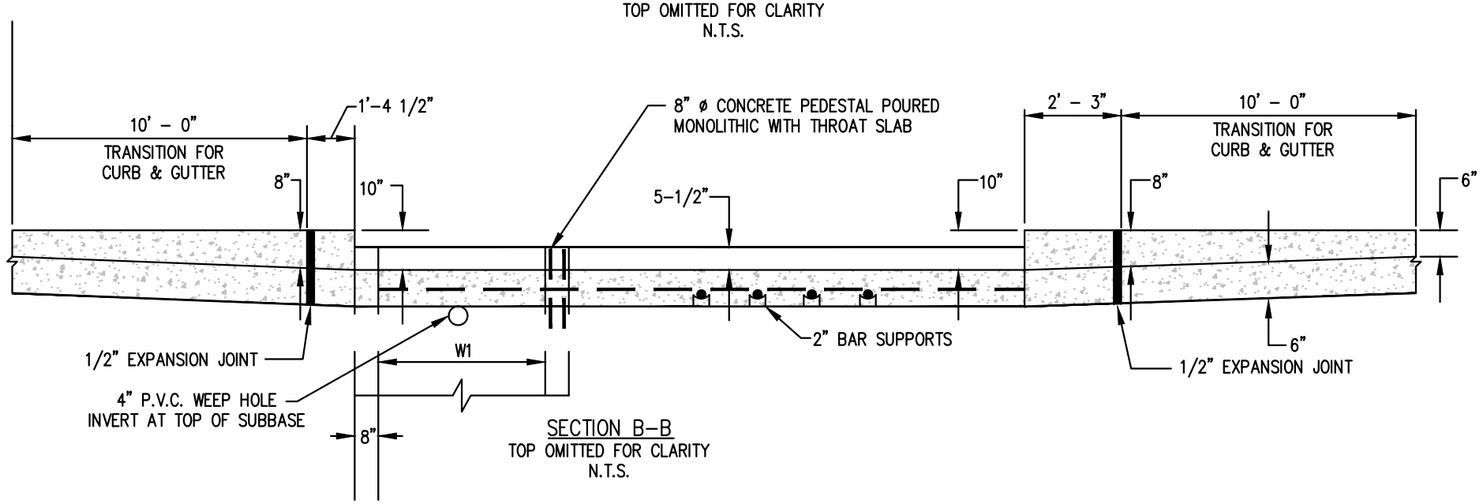

SECTION B–B
TOP OMITTED FOR CLARITY
N.T.S.

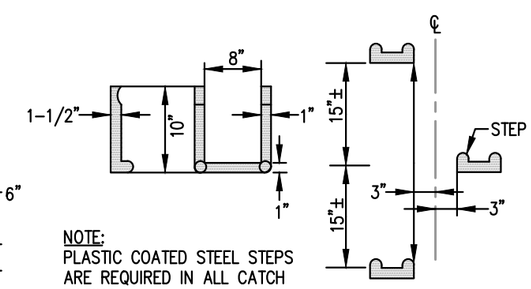

NOTE:
PLASTIC COATED STEEL STEPS ARE REQUIRED IN ALL CATCH BASINS.

CATCH BASIN STEP DETAIL
N.T.S.

DIMENSIONS FOR CATCH BASINS		
INSIDE DIAMETER OF PIPE IN INCHES	NORMAL W or W1	Minimum 'H'
18"	3' – 0"	4' – 10"
24"	3' – 0"	5' – 6"
30"	3' – 6"	6' – 2"
36"	4' – 0"	6' – 10"
42"	5' – 0"	7' – 4"
48"	5' – 0"	8' – 0"
54"	6' – 0"	8' – 6"
60"	6' – 0"	9' – 2"

NOTE:
FOR ALL CATCH BASINS, 1/2" EXPANSION JOINT MATERIAL SHALL BE PLACED AROUND THE CATCH BASIN WHERE SIDEWALK CURB OR PAVEMENT IS PLACED ADJACENT TO THE BASIN.

THE CITY OF ALPHARETTA GEORGIA

BY	REVISION	DATE
GS		1/6/16

SINGLE WING CATCH BASIN, ONE FOOT OFFSET

08/01/2015

STD. 202

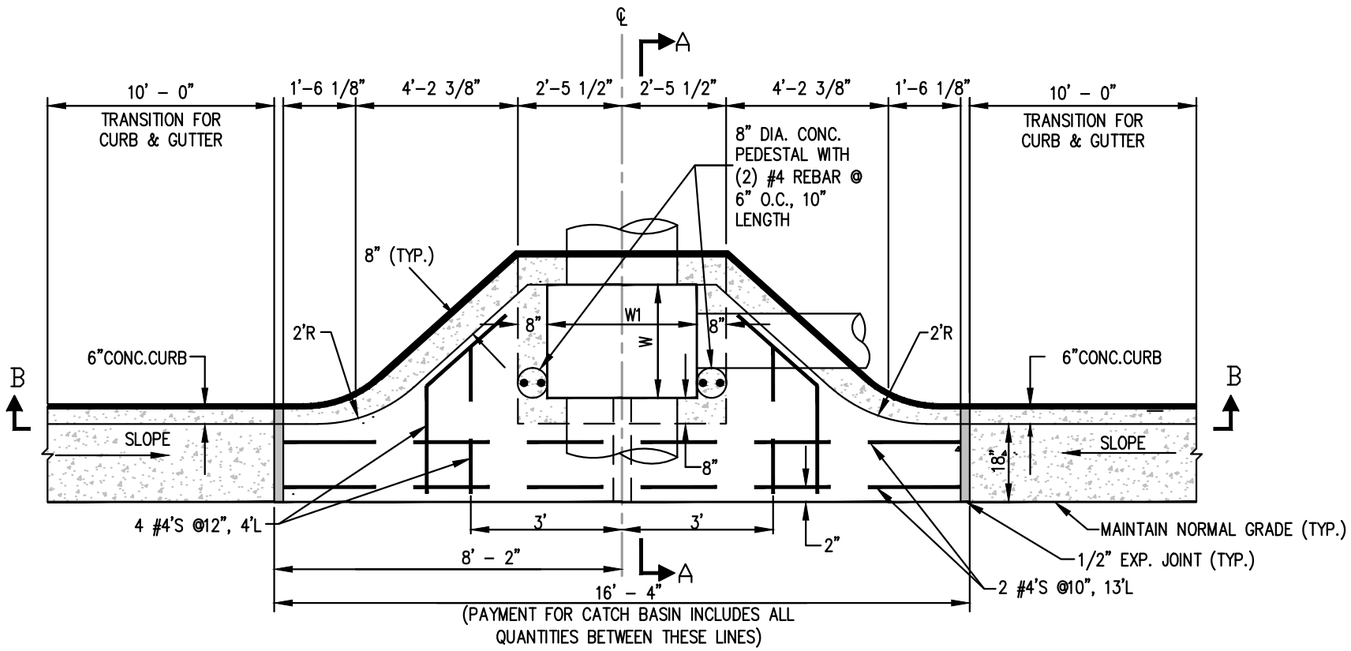

(PAYMENT FOR CATCH BASIN INCLUDES ALL QUANTITIES BETWEEN THESE LINES)

PLAN
TOP OMITTED FOR CLARITY
N.T.S.

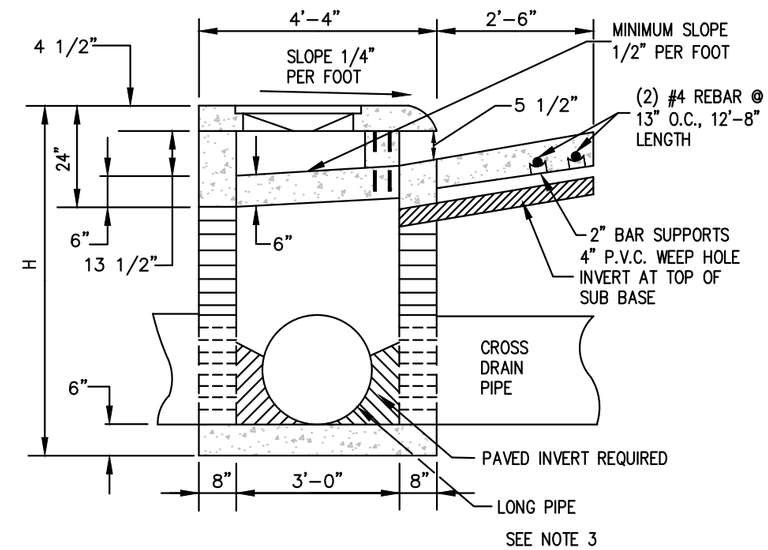

SECTION A–A
N.T.S.

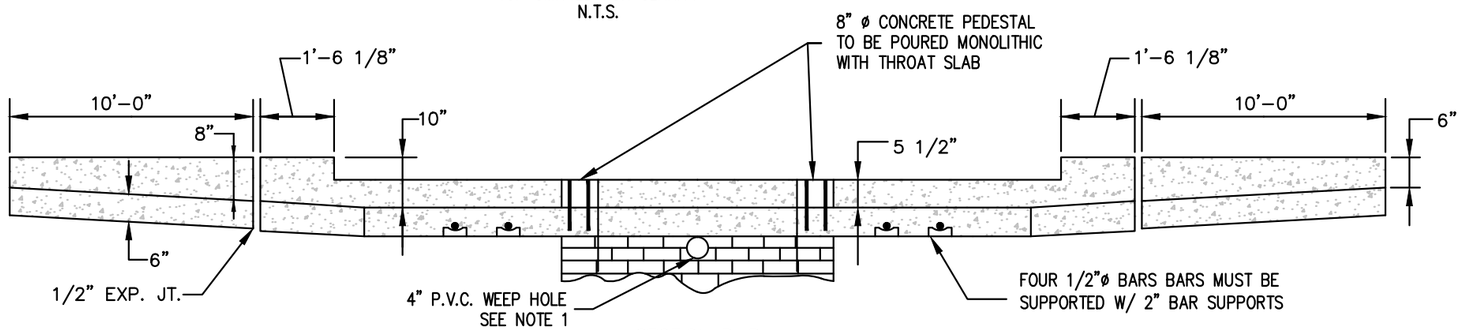

SECTION B–B
N.T.S.

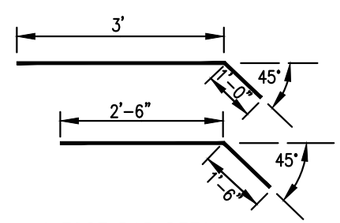

4 FOOT BAR DETAIL
N.T.S.

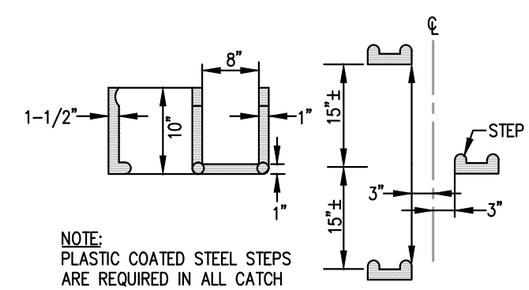

NOTE:
PLASTIC COATED STEEL STEPS ARE REQUIRED IN ALL CATCH BASINS.

CATCH BASIN STEP DETAIL
N.T.S.

NOTES:

1. FOR ALL CATCH BASINS, 1/2" EXPANSION JOINT MATERIAL SHALL BE PLACED AROUND THE CATCH BASIN WHERE SIDEWALK OR MEDIAN PAVEMENT IS PLACED ADJACENT TO THE CATCH BASIN.
2. PLASTIC COATED STEEL STEPS ARE REQUIRED IN ALL CATCH BASINS.
3. ALL POURED IN PLACE CONCRETE TO BE CLASS "A" 3000 P.S.I.
4. 8" CONCRETE PEDESTAL REQUIRE 4 – 1/2" ø BARS EACH.

DIMENSIONS FOR CATCH BASINS		
INSIDE DIAMETER OF PIPE IN INCHES	NORMAL W or W1	MINIMUM 'H'
18"	3'–0"	4'–10"
24"	3'–0"	5'–6"
30"	3'–6"	6'–2"
36"	4'–0"	6'–10"
42"	5'–0"	7'–4"
48"	5'–0"	8'–0"
54"	6'–0"	8'–6"
60"	6'–0"	9'–2"

THE CITY OF ALPHARETTA GEORGIA

BY	REVISION	DATE
GS		1/6/16

DOUBLE WING CATCH BASIN, ONE FOOT OFFSET

08/01/2015

STD. 203

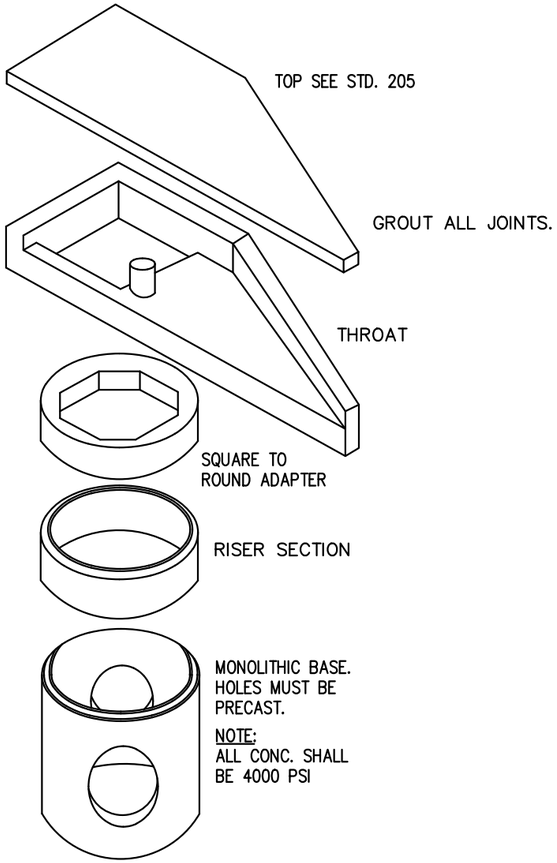

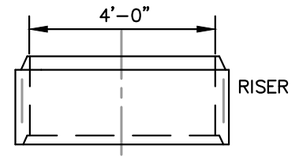

REINF TO BE 2/2 6x6 WELDED WIRE FABRIC

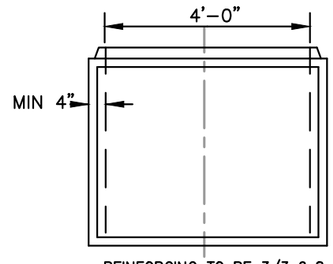

REINFORCING TO BE 3/3 6x8 WELDED WIRE FABRIC

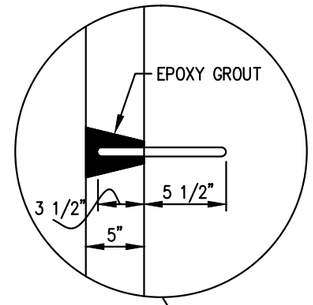

TYPICAL STEP
N.T.S.

NOTE:
STEPS TO BE INSTALLED ON 15" VERTICAL SPACING.

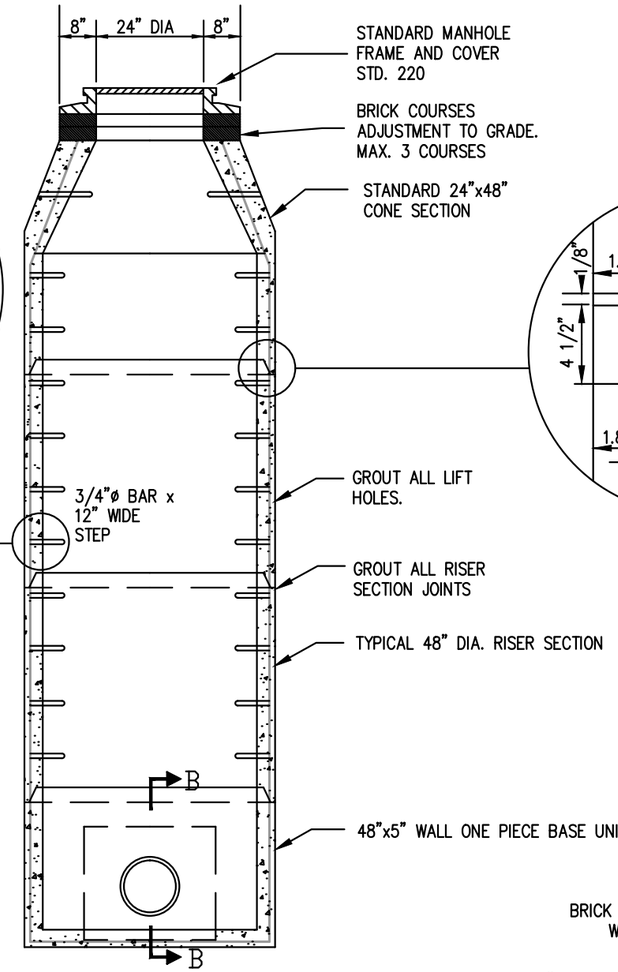

TYPICAL INSTALLATION
N.T.S.

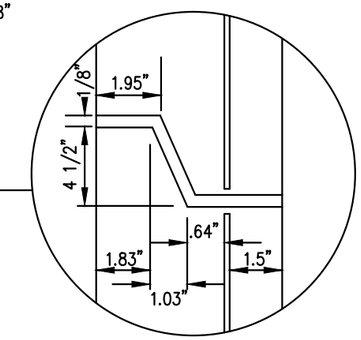

TYPICAL JOINT
N.T.S.

NOTES:

1. ALL HOLES MUST BE PRECAST.
2. MAXIMUM HOLE SIZE = PIPE OUTSIDE DIAMETER + 4".
3. SEAL AROUND ALL JOINTS AND LIFTING HOLES.
4. PAVED INVERT REQUIRED.

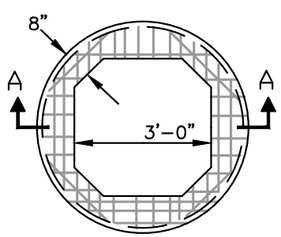

REINFORCING TO BE 2/2 6x6 WELDED 10 GAUGE WIRE FABRIC W/4-/5 BARS DIAGONAL, 4'-8" DIA.

ROUND TO SQUARE ADAPTER
N.T.S.

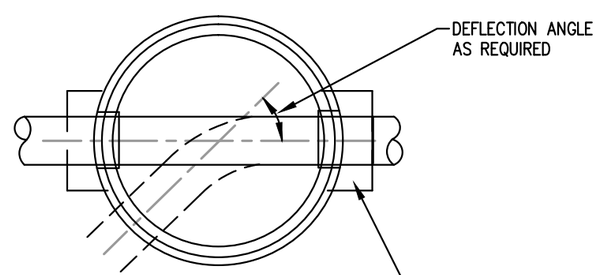

PLAN VIEW
ONE PIECE BASE UNIT
N.T.S.

SECTION B-B
THRU ONE PIECE BASE UNIT
N.T.S.

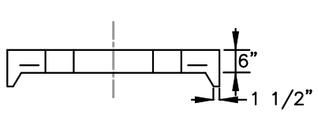

SECTION A-A
N.T.S.

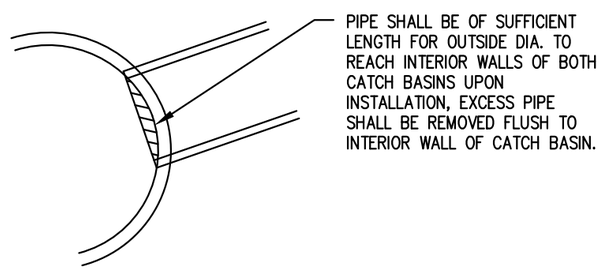

THE CITY OF ALPHARETTA GEORGIA

BY	REVISION	DATE
GS		1/6/16

PRECAST STRUCTURE

08/01/2015

STD. 204

NOTE: TOP SLAB TO HAVE LIGHT BROOM FINISH

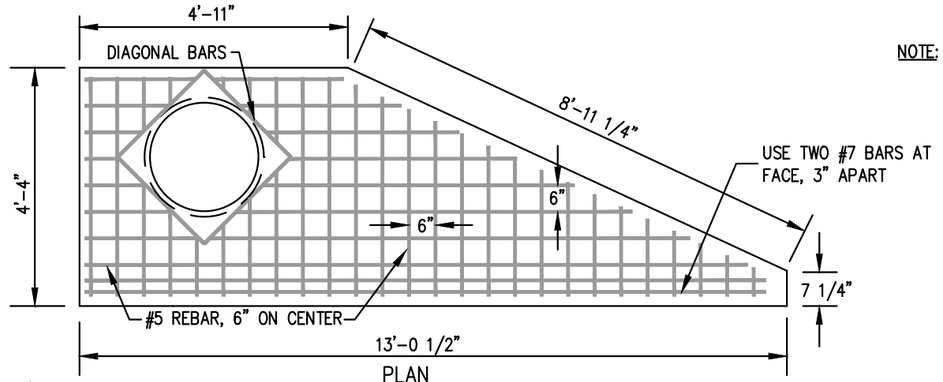

PLAN
N.T.S.

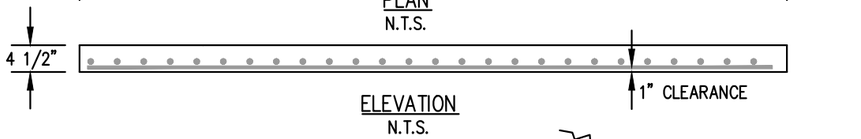

ELEVATION
N.T.S.

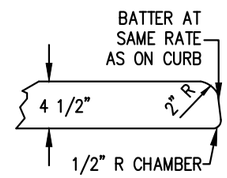

DETAIL OF TOP SLAB
N.T.S.

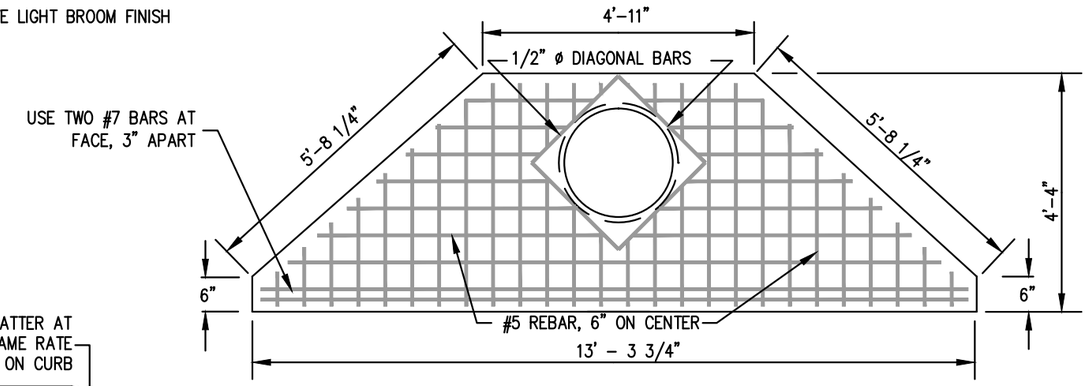

PLAN
N.T.S.

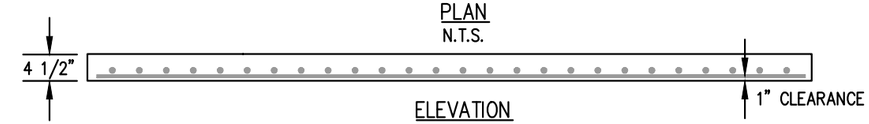

ELEVATION
N.T.S.

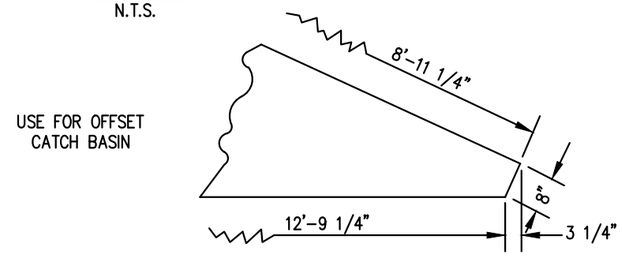

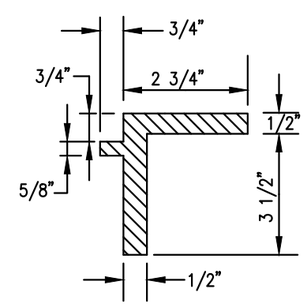

SECTION G-G
N.T.S.

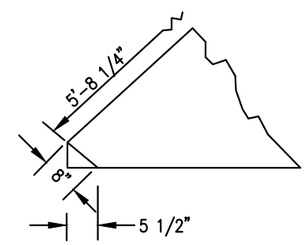

USE FOR OFFSET CATCH BASIN

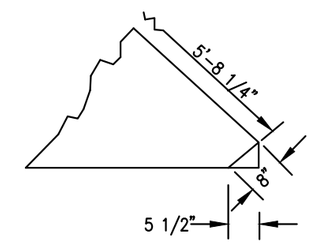

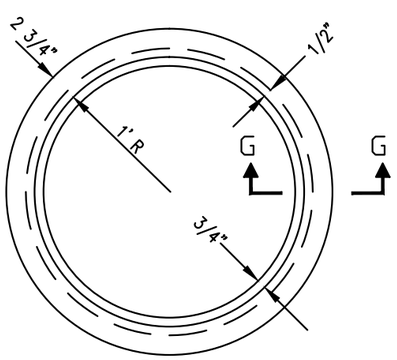

PLAN
RING
N.T.S.

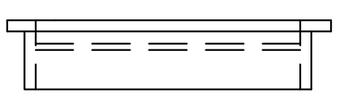

ELEVATION
N.T.S.

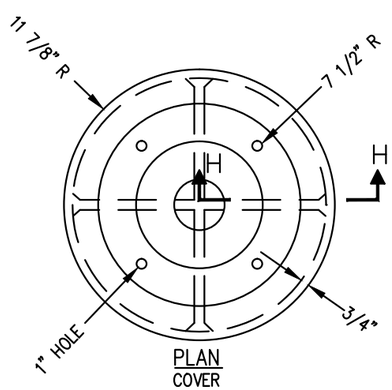

PLAN
COVER
N.T.S.

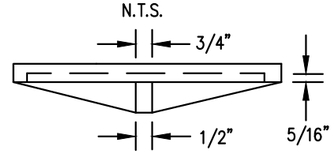

ELEVATION
N.T.S.

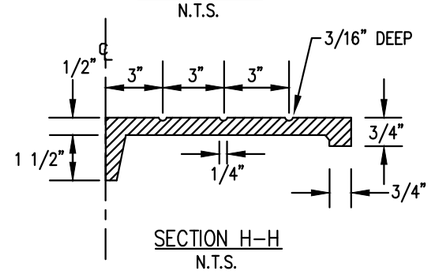

SECTION H-H
N.T.S.

APPROXIMATE WEIGHTS:
CAST IRON RING 78 LBS
CAST IRON COVER 63 LBS

THE CITY OF ALPHARETTA GEORGIA

BY	REVISION	DATE

CATCH BASIN TOPS

08/01/2015

STD. 205

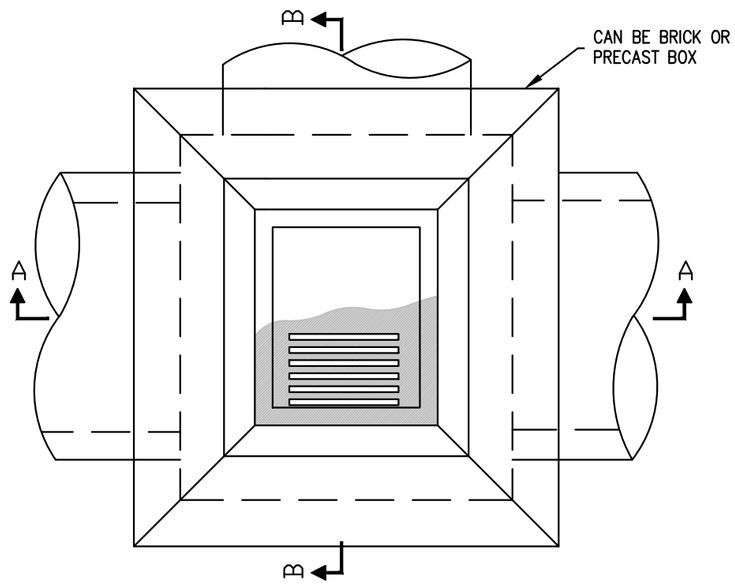

PLAN
N.T.S.

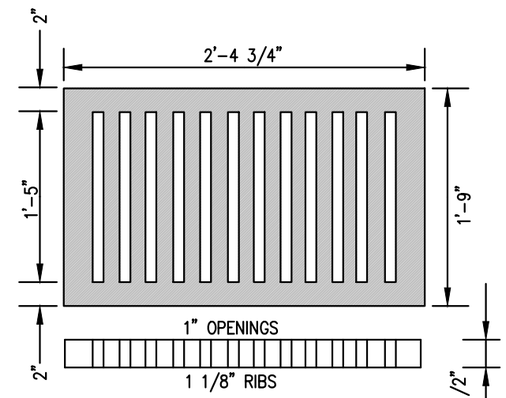

DETAIL OF CAST IRON GRATING
APPROX. WT. 200 LB
N.T.S.

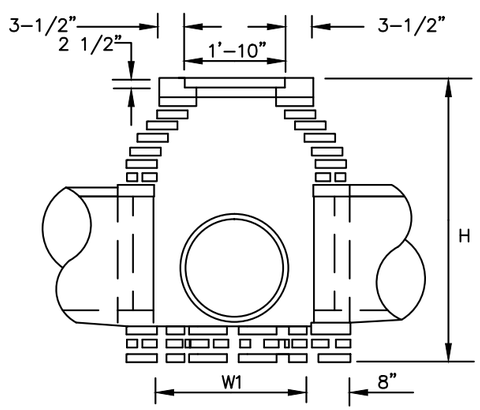

SECTION A-A
N.T.S.

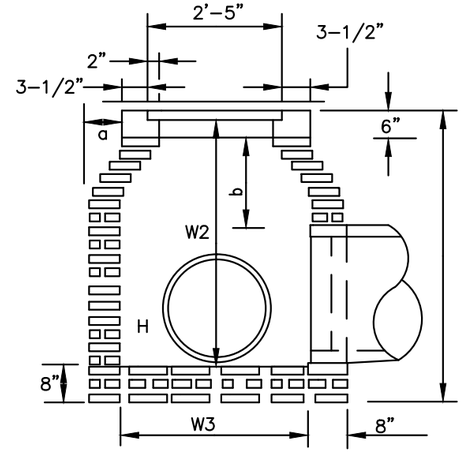

SECTION B-B
N.T.S.

NOTES:

1. PAVED INVERT REQUIRED.
2. SEE STD. 213 FOR DIMENSIONS.

THE CITY OF ALPHARETTA GEORGIA			BRICK DROP INLET
GS		1/6/16	08/01/2015
			STD. 210
BY	REVISION	DATE	

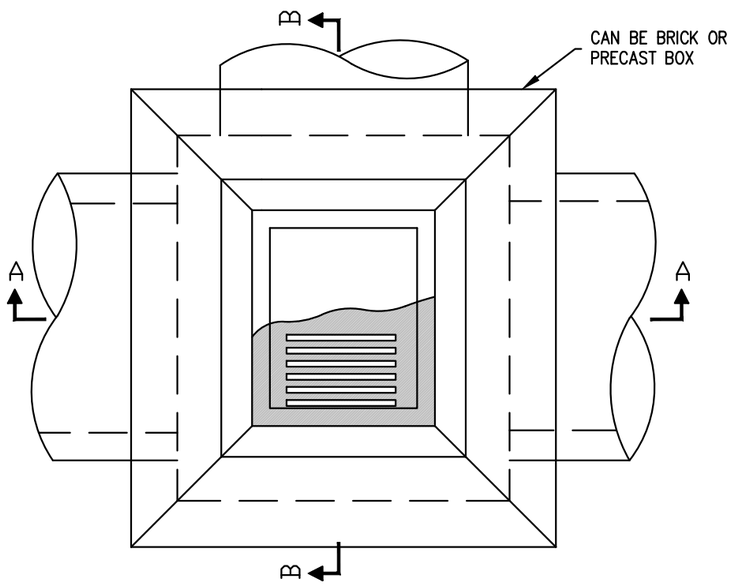

TYPE A
N.T.S.

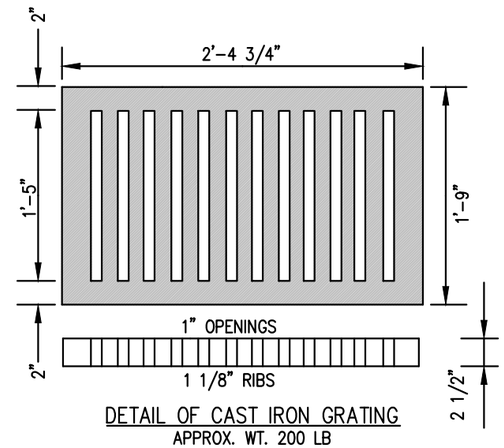

DETAIL OF CAST IRON GRATING
APPROX. WT. 200 LB
N.T.S.

NOTES:

1. ALL REINFORCING STEEL SHALL BE 1/2 ø AND COVERED NO LESS THAN 2".
2. HORIZONTAL REINFORCING STEEL SHALL BE AT 6" ON CENTER (MAXIMUM).
3. VERTICAL ROW STEEL SHALL BE AT 12" ON CENTER (MAXIMUM).
4. SEE STD. 213 FOR DIMENSIONS.
5. GRATE SLOTS SHALL BE PERPENDICULAR TO THE FLOW OF TRAFFIC OR AN ALTERNATE "BICYCLE SAFE GRATE" SHALL BE USED.

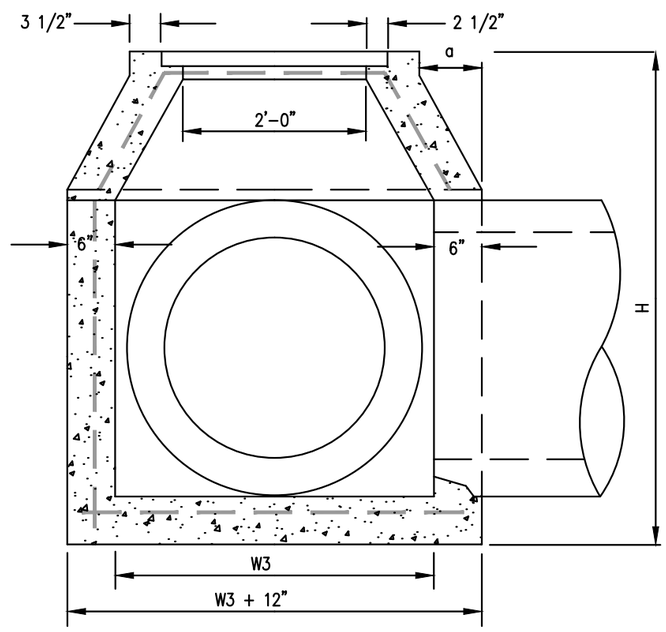

SECTION B-B
N.T.S.

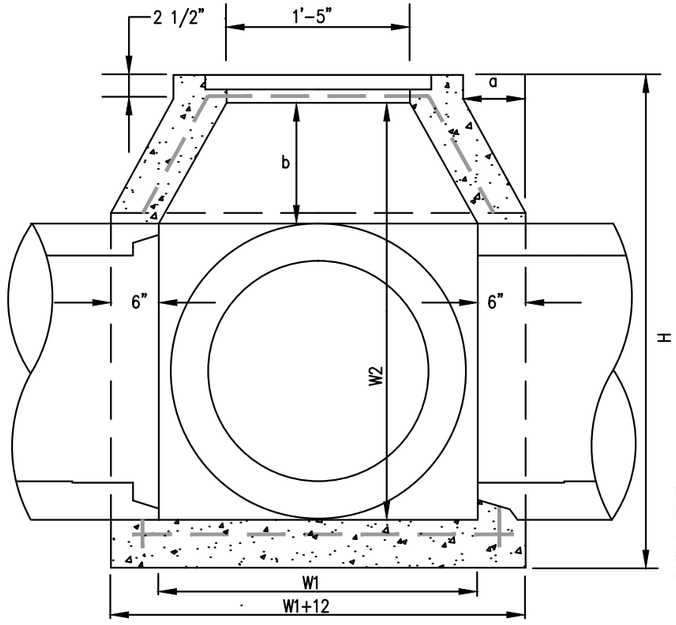

SECTION A-A
N.T.S.

NOTE:
USE ROUND TO SQUARE ADAPTER W/GRATE CAST IN IF ROUND BOX, OR USE SLAB WITH GRATE CAST IN.

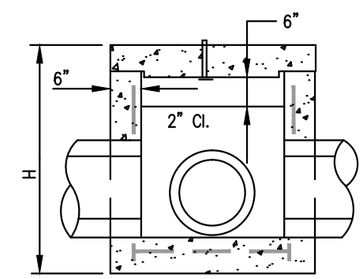

TYPE B
N.T.S.
NOTE: PAVED INVERT REQUIRED.

THE CITY OF ALPHARETTA GEORGIA

BY	REVISION	DATE
GS		1/6/16

CONCRETE DROP INLET

08/01/2015

STD. 211

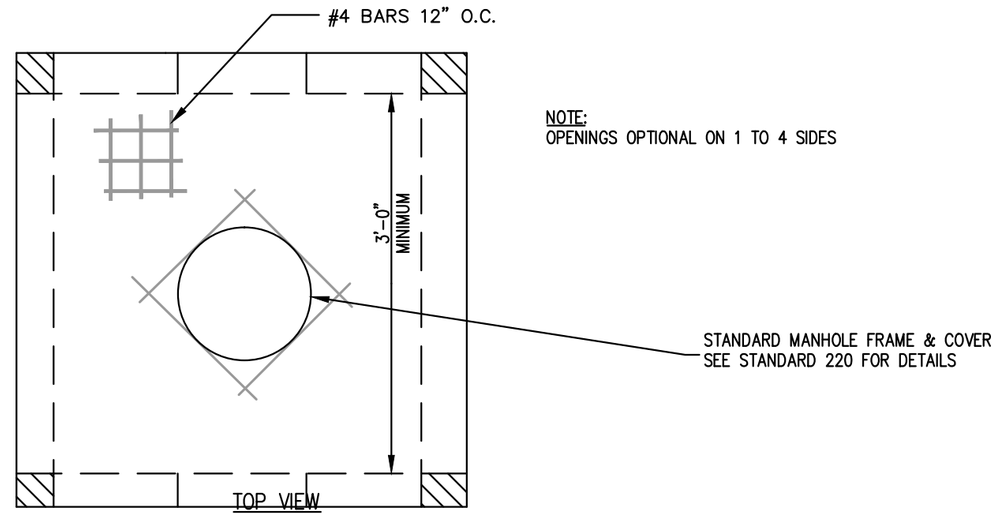

NOTE:
OPENINGS OPTIONAL ON 1 TO 4 SIDES

TOP VIEW
N.T.S.

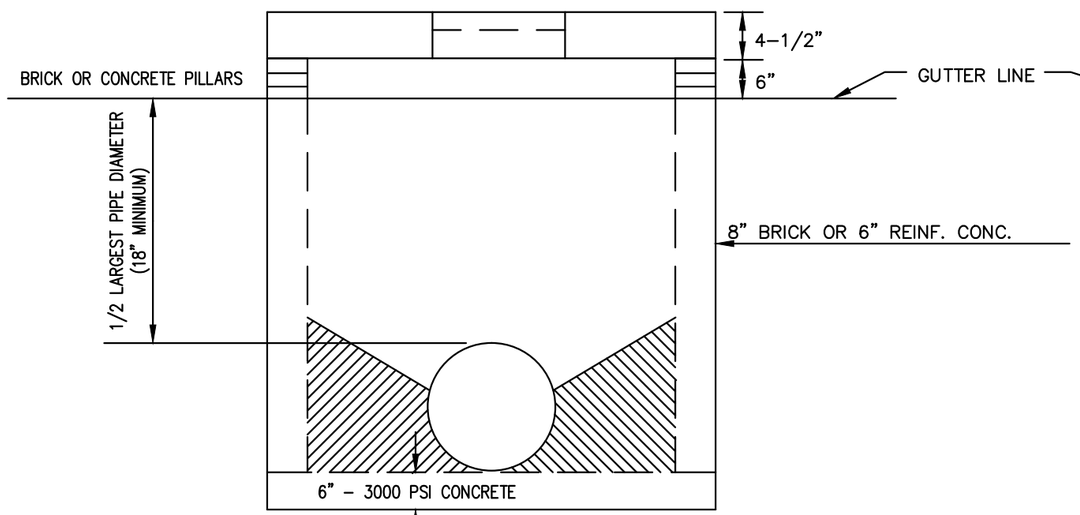

FRONT VIEW
N.T.S.

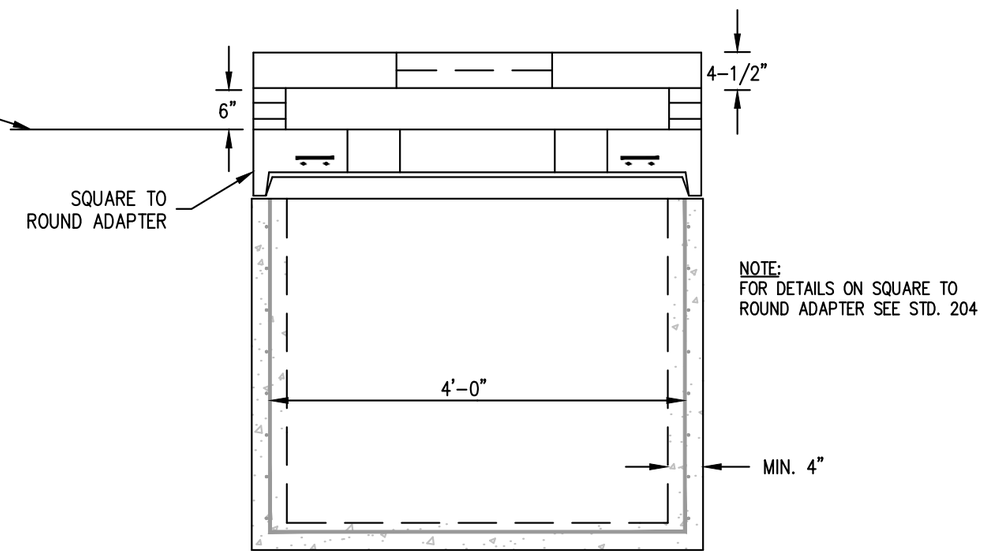

NOTE:
FOR DETAILS ON SQUARE TO
ROUND ADAPTER SEE STD. 204

ALTERNATE FRONT VIEW FOR
ROUND PRECAST BOX
N.T.S.

NOTES:
1. PAVED INVERT REQUIRED.
2. DROP INLET BOX TO BE CONSTRUCTED PER STD. 210 OR 211 AS APPLICABLE.

THE CITY OF ALPHARETTA GEORGIA

BY	REVISION	DATE
GS		1/6/16

PEDESTAL INLET

08/01/2015

STD. 212

BRICK DROP INLET (STD. 210)

D	W1	MIN.–W2	W3	a	b	MIN–H
18"	2'–2"	3'–2 1/2"	2'–9"	0'–4 1/2"	0'–8"	4'–1"
24"	2'–8"	3'–3"	3'–3"	0'–7 1/2"	1'–1 1/4"	4'–9"
30"	3'–7 1/4"	4'–0"	3'–10"	1'–0"	1'–9"	5'–10"
36"	4'–2"	6'–0 1/2"	4'–9"	1'–4 1/2"	2'–2 1/4"	6'–11"
42"	4'–5"	7'–1 3/4"	5'–0"	1'–6"	2'–7 1/4"	8'–0 1/4"
48"	5'–0"	8'–2 3/4"	5'–7"	1'–9 1/2"	3'–1 1/4"	9'–1 1/4"
54"	5'–7"	9'–4"	6'–2"	2'–1"	3'–7 1/2"	10'–2 1/2"
60"	6'–2"	10'–5"	6'–9"	2'–4 1/2"	4'–1 1/2"	11'–3 1/4"
60"	6'–9"	11'–6"	7'–4"	2'–8"	4'–7 1/2"	12'–4 1/4"
72"	7'–4"	12'–7"	7'–11"	2'–11 1/2"	5'–2"	13'–5 1/2"

NOTE:
MAXIMUM VERTICAL DEPTH FOR DROP INLET – H=15'–0"

CONCRETE DROP INLET (STD. 211)

TYPE A							TYPE B		
D	W1	MIN.–W2	W3	a	b	MIN–H	NORMAL W OR W1	MIN–h	MIN–H
18"	2'–0"	2'–9 1/2"	2'–7"	0'–3 1/2"	0'–6"	3'–6"	2'–3"	2'–10"	4'–0"
24"	2'–8"	4'–0 1/2"	3'–3"	0'–7 1/2"	1'–1"	4'–9"	3'–0"	3'–8"	4'–10"
30"	3'–4"	5'–1 1/2"	3'–11"	0'–11 1/2"	1'–8"	5'–10"	3'–6 1/2"	4'–2 1/2"	5'–4 1/2"
36"	3'–10"	6'–1 1/2"	4'–5"	1'–2 1/2"	2'–1 1/4"	6'–10"	4'–2"	4'–10"	6'–0"
42"	4'–5"	7'–2 1/2"	5'–0"	1'–6"	2'–7 1/2"	7'–11"	4'–8 1/2"	5'–4 1/2"	6'–6 1/2"
48"	5'–0"	8'–3 1/2"	5'–7"	1'–9 1/2"	3'–1 1/4"	9'–0"	5'–3 1/2"	5'–11 1/2"	7'–1 1/2"
54"	5'–7"	9'–4 1/2"	6'–2"	2'–1"	3'–7 1/4"	10'–1"	5'–10"	6'–6"	7'–8"
60"	6'–2"	10'–5 1/2"	6'–9"	2'–4 1/2"	4'–1 1/2"	11'–2"	6'–4 1/2"	7'–0 1/2"	8'–2 1/1"
60"	6'–9"	11'–6 1/2"	7'–4"	2'–8"	4'–7 1/2"	12'–3"	6'–11"	7'–7"	8'–9"
72"	7'–4"	12'–7 1/2"	7'–11"	2'–11 1/2"	5'–1 1/4"	13'–4"	7'–5 1/2"	8'–1 1/2"	9'–3"

THE CITY OF ALPHARETTA GEORGIA

BY	REVISION	DATE

DROP INLET DIMENSIONS

08/01/2015

STD. 213

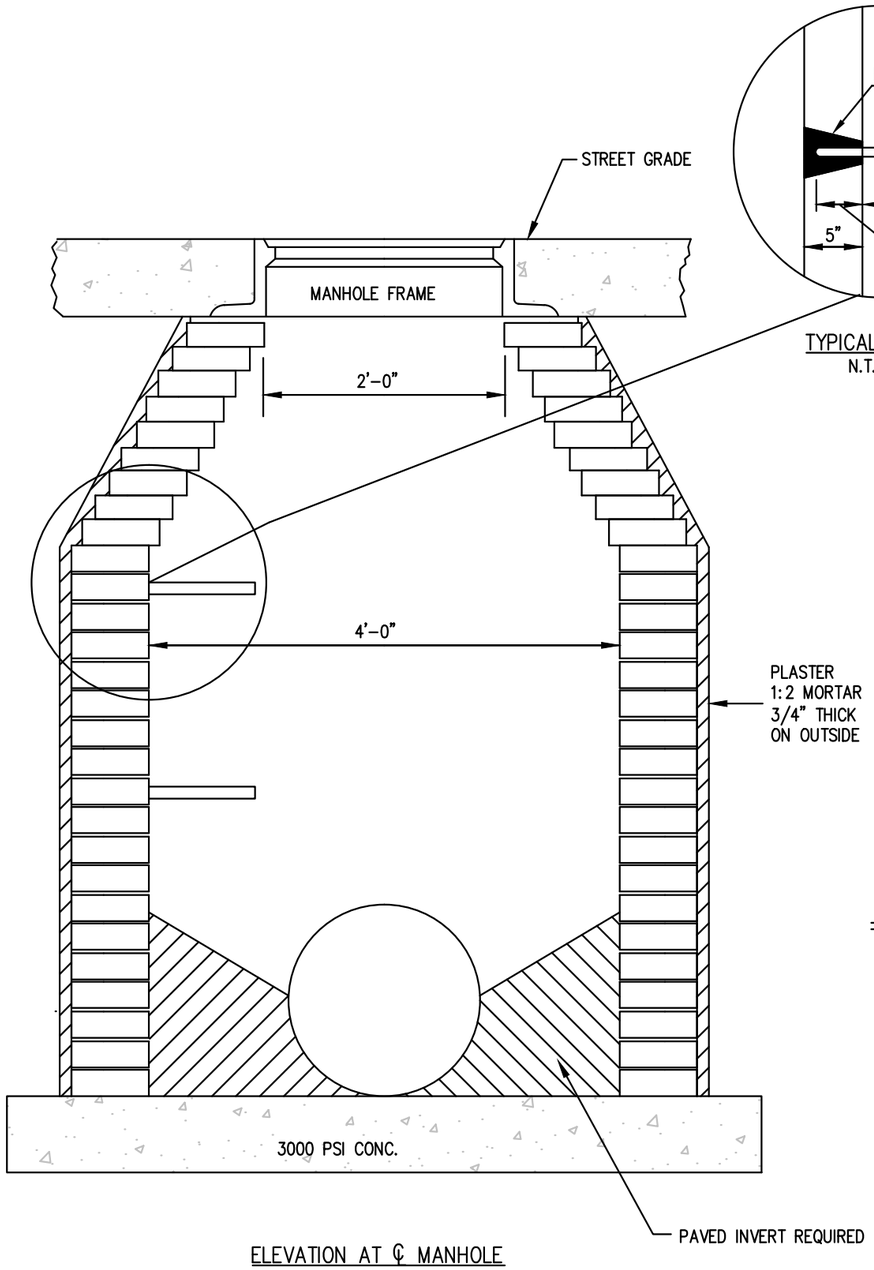

ELEVATION AT ℄ MANHOLE
N.T.S.

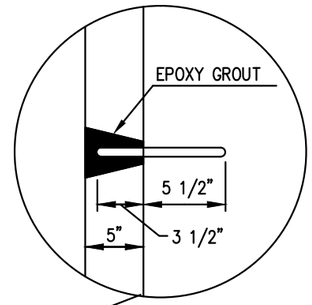

TYPICAL STEP
N.T.S.

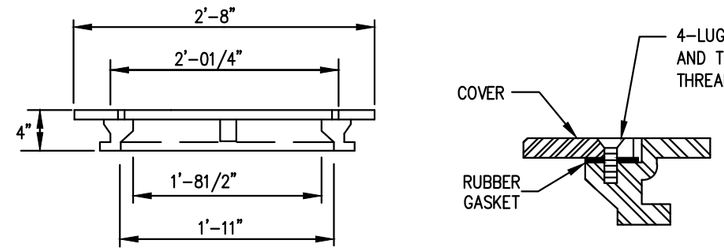

NOTE:
WATERTIGHT MANHOLE FRAME AND COVER TO BE CLOW F-3370 OR EQUAL. MINIMUM TOTAL WEIGHT 270 LBS

WATERTIGHT CAST IRON MANHOLE FRAME AND COVER
N.T.S.

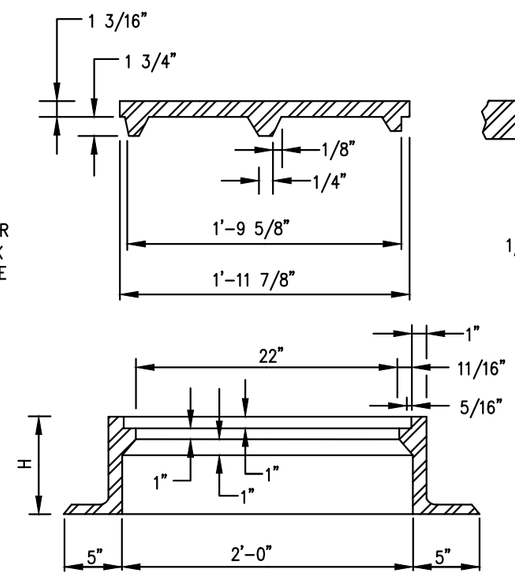

FRAME - 282 LB.
COVER - 178 LB.
TOTAL 460 LB.

NOTE:
SEATING SURFACE OF FRAME AND COVER TO BE MACHINE FIT

H	FRAME & COVER
6"	350 LB.
9"	460 LB.

460 MANHOLE FRAME AND COVER
N.T.S.

NOTES:
1. 350 LB. FRAMES AND COVERS MAY BE USED OUTSIDE OF STREETS & ROADS. COVERS TO BE SIMILAR TO 460 LB. FRAME, BUT REDUCED IN HEIGHT AND THICKNESS.

2. ALL COVERS TO BE VENTED UNLESS OTHERWISE NOTED.

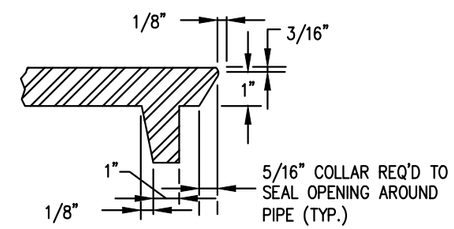

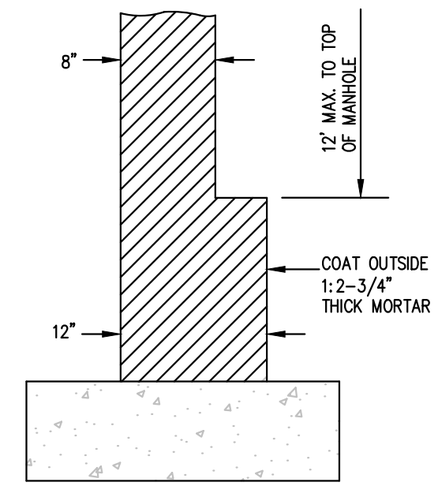

WALL DETAIL FOR DEPTH OVER 12'-20'
N.T.S.

NOTE:
FOR DEPTH OVER 20', INCREASE WALL THICKNESS TO 16".

NOTES:
1. 6" SLAB FOR 4'-0" DIA.

2. 8" SLAB FOR 5'-0" AND 6'-0" DIA.

THE CITY OF ALPHARETTA GEORGIA

BY	REVISION	DATE
GS		1/6/16

BRICK MANHOLE DETAIL
AND
MH FRAME AND COVER

08/01/2015

STD. 220

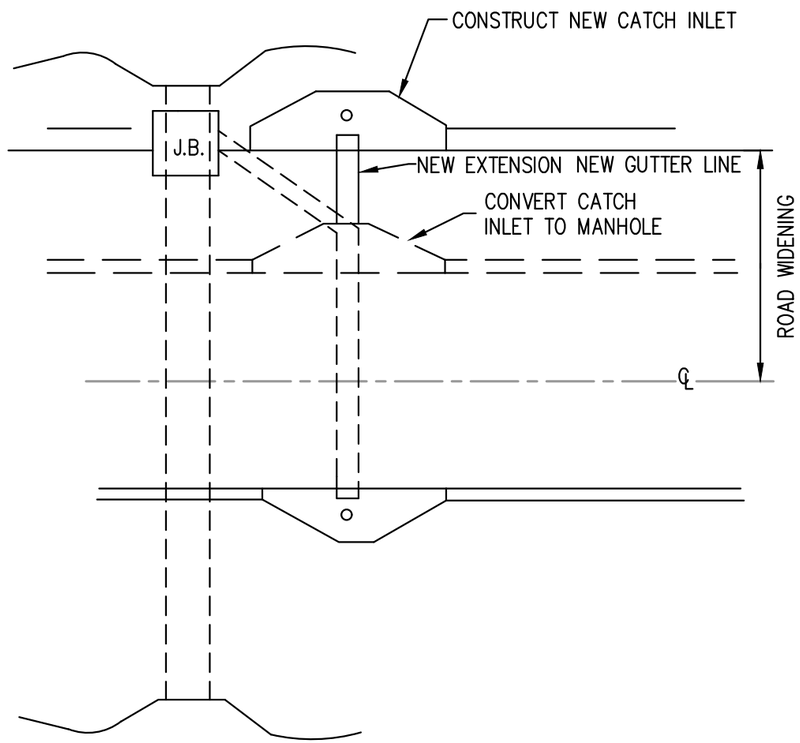

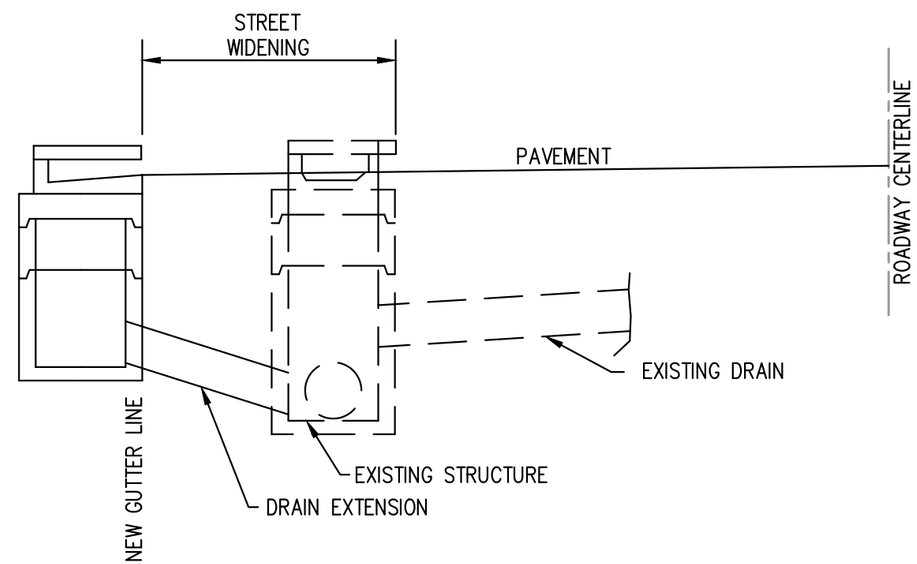

STREET WIDENING
CONVERTING CATCH INLET TO MANHOLE
N.T.S.

NOTES:
1. REMOVE EXISTING TOP & THROAT OF CATCH INLET.
2. ADD BRICK COURSES FOR GRADE ADJUSTMENT.
3. COMPLETE BY ADDING STANDARD MANHOLE FRAME COVER, PER STDS. 220 AND 401.

THE CITY OF ALPHARETTA GEORGIA			CATCH INLET RELOCATION
			08/01/2015
			STD. 221
BY	REVISION	DATE	

NORMAL BACKFILL NOTES:

1. BACKFILL, AS SHOWN BY BROKEN LINE SECTIONS, SHALL CONSIST OF PLACING COMPACTABLE SOIL IN 6" (LOOSE) LAYERS AND COMPACTING EACH LAYER TO 95% MAXIMUM DENSITY ON BOTH SIDES OF PIPE FOR ITS FULL LENGTH.
2. NORMAL EMBANKMENT SHALL BE PLACED A MIN. OF 12" WIDE ON EACH SIDE OF THE PIPE AND AT LEAST THE MIN. COVER OVER THE PIPE AND COMPACTED TO THE REQ'D DENSITY BEFORE EQUIPMENT IS ALLOWED TO CROSS.
3. AFTER BACKFILL HAS BEEN COMPACTED, THE BALANCE OF THE FILL UP TO THE GRADE LINE SHALL BE CONSTRUCTED IN ACCORDANCE WITH EMBANKMENT SPECIFICATIONS.

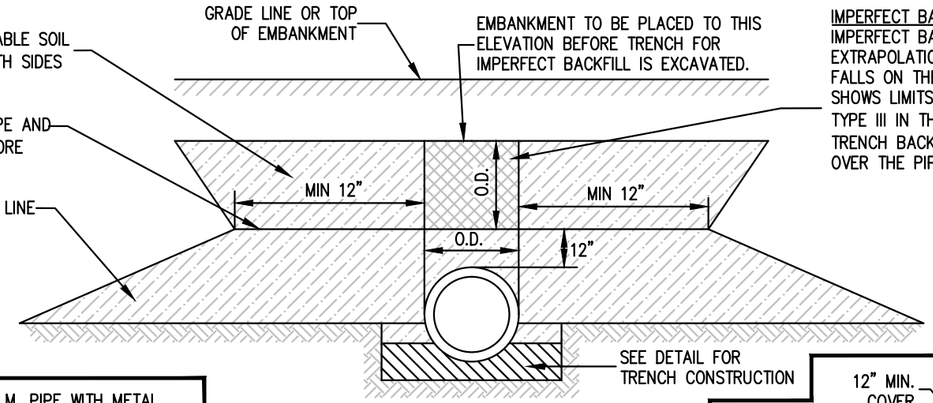

LONGITUDINAL SECTION OF IMPERFECT TRENCH BACKFILL AND BACKFILL METHODS
N.T.S.

IMPERFECT BACKFILL NOTES:
IMPERFECT BACKFILL WILL BE USED WITH CONCRETE PIPE IF AN EXTRAPOLATION OF FILL HEIGHT AND PIPE DIA. IN TABLE NO. 1 SHT. 231 FALLS ON THE RIGHT SIDE OF THE HEAVY LINE. CROSS HATCHED AREA SHOWS LIMITS OF STRUCTURE EXCAVATION AND IMPERFECT BACKFILL TYPE III IN THIS VIEW. SEE DETAILS (CROSS SECTIONS OF IMPERFECT TRENCH BACKFILL) FOR LIMITS OF IMPERFECT BACKFILL AS MEASURED OVER THE PIPE LENGTHWISE.

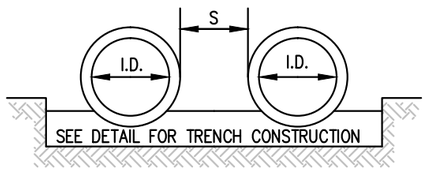

MULTIPLE PIPE CULVERT SPACING
N.T.S.

NOTES:

1. FOR MULTIPLE LINES OF C.M. PIPE WITH METAL FLARED END SECTIONS MAY BE INCREASED ENOUGH TO AVOID OVERLAP OF END SECTION WINGTIPS. LOCATION OF METAL END SECTION SHOULD BE DETERMINED BEFORE PLACEMENT OF PIPE.
2. S = ONE INSIDE ø OF PIPE, OR 3', WHICHEVER IS SMALLER.
3. 3. FOR PIPE-ARCH CULVERTS, SUBSTITUTE SPAN FOR INSIDE ø.

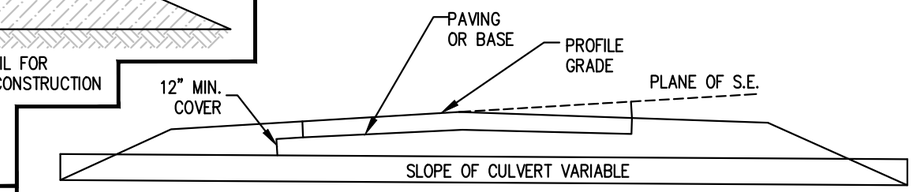

DETAIL SHOWING MINIMUM COVER FOR PIPE CULVERTS
N.T.S.

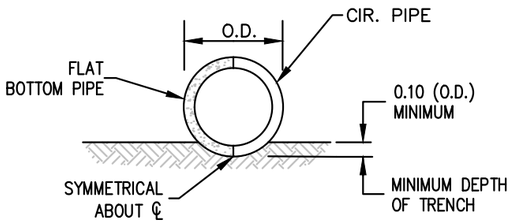

NOTE:
THE PIPE SHALL BE ADDED TO LINE AND GRADE IN A FIRM FOUNDATION SHAPED TO FIT THE LOWER PART OF THE PIPE EXTERIOR, WHERE ROCK EXISTS. EXCAVATE AND BACKFILL WITH COMPRESSIBLE MATERIAL (UNCLASSIFIED EXCAVATION) MIN. OF 6" INCH BELOW THE PIPE.

TRENCH CONSTRUCTION FOR LONGITUDINAL OR SIDE DRAIN
N.T.S.

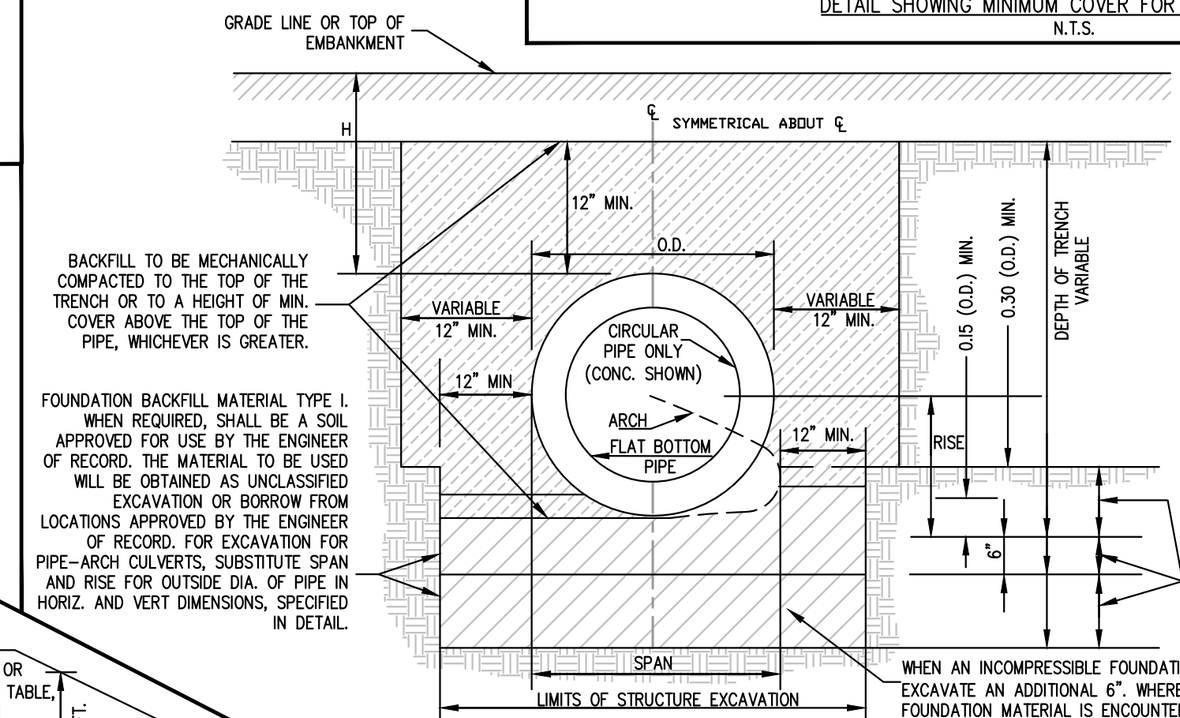

TRENCH CONSTRUCTION FOR STORM DRAIN
N.T.S.

NOTES:

1. TRENCH CONSTRUCTION IS REQUIRED FOR BOTH NORMAL OR IMPERFECT BACKFILL. ALL PIPES WITH BELL & SPIGOT JOINTS SHALL HAVE BELL HOLES IN BEDDING.
2. BELL HOLES SHALL BE PROVIDED IN BEDDING IF PIPE HAS BELL AND SPIGOT JOINTS.
3. PIPE SHALL BE BEDDED IN A FOUNDATION SHAPED TO FIT THE LOWER PART OF THE PIPE EXTERIOR

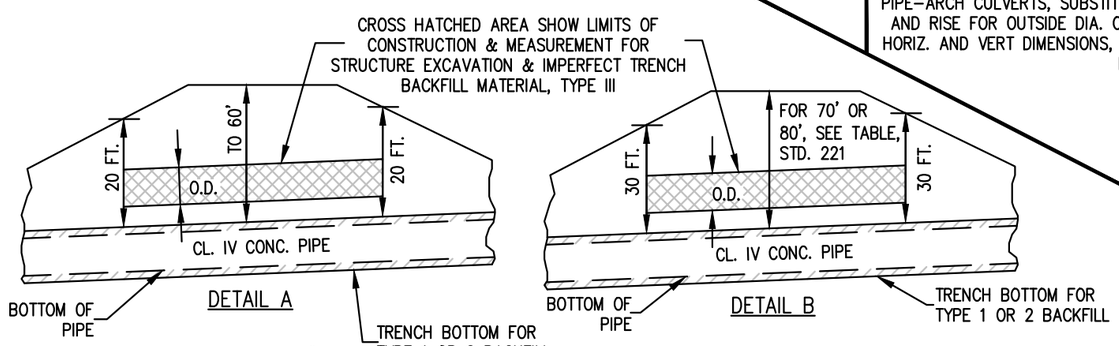

FOR CONCRETE PIPE DIAMETERS 78" & 84", WITH FILL HEIGHTS OVER 20 FT.

FOR CONCRETE PIPE DIAMETERS 72" AND LESS, WITH FILL HEIGHTS OVER 30 FT.

CROSS SECTIONS OF IMPERFECT TRENCH BACKFILL
N.T.S.

THE CITY OF ALPHARETTA GEORGIA

BY	REVISION	DATE

PIPE CULVERTS

08/01/2015

STD. 230

TABLE NO. 2 (PIPE-ARCH)
TABLE SHOWING MINIMUM THICKNESS IN INCHES OF CORRUGATED STEEL AND CORRUGATED ALUMINUM PIPE-ARCH AND MAXIMUM HEIGHTS OF FILL IN FEET ABOVE THE TOP OF THE PIPE-ARCH

DIAMETER OF PIPE OF EQUAL PERIPHERY INCH	NOM.-MIN. SPAN INCH	NOM.-MIN. RISE INCH	MIN. THICKNESS (INCHES) COR. STEEL 1	MIN. THICKNESS (INCHES) COR. STEEL 2	MIN. THICKNESS (INCHES) COR. ALUMINUM	MAX. HT. FILL (FT.)
15	17	13	0.0640			13
					0.0600	15
18	21	15	0.0640			12
					0.0600	14
21	24	18	0.0640			10
					0.0600	13
24	28	20	0.0640			9
					0.0750	11
30	35	24	0.0640			9
					0.0750	9
36	42	29	0.0640			7
					0.1050	7
	40	31		0.0790		12
42	49	33	0.0460			7
					0.1050	7
	46	36	0.0790	0.0790		12
48	57	38	0.1090			7
					0.1350	7
	57	41		0.0790		12
54	64	43	0.1090			7
					0.1350	7
	60	46		0.0790		12
60	71	47	0.1380			7
					0.1640	7
	66	51		0.0790		12
66	77	52	0.1680			7
	73	55		0.0790		15
77	83	57	0.1680			8
	81	59		0.0790		15
78	87	63		0.0790		14
84	95	67		0.1090		12
90	103	71		0.1090		11

TABLE NO.3(INFORMATION ONLY)

COR. METAL THICKNESS		EQUIVALENT GAUGE
STEEL	0.0640	16
	0.0790	14
	0.1090	12
	0.1380	10
	0.1680	8
ALUMINUM	0.0600	16
	0.0750	14
	0.1050	12
	0.1350	10
	0.1640	8

TABLE NO 1 ROUND PIPE – CONCRETE – CORRUGATED STEEL – CORRUGATED ALUMINUM
MINIMUM CLASS OF CONCRETE OR MINIMUM THICKNESS OF STEEL AND ALUMINUM

PIPE DIAMETER (INCHES)	TYPE	HEIGHT OF FILL IN FEET ABOVE TOP OF PIPE 1–10	10–15	15–20	20–25	25–30	30–35	35–40	40–50	50–60	60–70	70–80	80–90
12	CONCRETE	III	III	IV	V	V	V	V	V	V	V	V	
	STEEL 1	0.0640	0.0640	0.0640	0.0640	0.0640	0.0640	0.0640	0.0640	0.0640	0.0640	0.0640	0.0640
	ALUM 1	0.0600	0.0600	0.0600	0.0600	0.0750	0.0750	0.0750	0.0750	0.0750	0.0750	0.0750	0.0750
15	CONCRETE	III	III	IV	V	V	V	V	V	V	V	V	
	STEEL 1	0.0640	0.0640	0.0640	0.0640	0.0640	0.0640	0.0640	0.0640	0.0640	0.0640	0.0640	0.0640
	ALUM 1	0.0600	0.0600	0.0600	0.0600	0.0750	0.0750	0.0750	0.0750	0.0750	0.0750	0.0750	0.1050
18	CONCRETE	III	III	IV	V	V	V	V	V	V	V	V	
	STEEL 1	0.0640	0.0640	0.0640	0.0640	0.0640	0.0640	0.0640	0.0640	0.0640	0.0640	0.0640	0.0640
	ALUM 1	0.0600	0.0600	0.0600	0.0600	0.0750	0.0750	0.0750	0.0750	0.1050	0.1050	0.1050	0.1050
24	CONCRETE	III	III	IV	V	V	V	V	V	V	V	V	
	STEEL 1	0.0640	0.0640	0.0640	0.0640	0.0640	0.0640	0.0640	0.0640	0.0640	0.0640	0.7900	0.7900
	ALUM 1	0.0600	0.0600	0.0600	0.7500	0.7500	0.7500	0.7500	0.1050	0.1050	0.1050	0.1050	
30	CONCRETE	III	III	IV	V	V	V	V	V	V	V	V	
	STEEL 1	0.0640	0.0640	0.0640	0.0640	0.0640	0.0640	0.0640	0.0640	0.0790	0.0790	0.1090	0.1090
	ALUM 1	0.0750	0.0750	0.0750	0.0750	0.0750	0.1050	0.1050	0.1050	0.1350	0.1350		
36	CONCRETE	III	III	IV	V	V	V	V	V	V	V	V	
	STEEL 1	0.0640	0.0640	0.0640	0.0640	0.0640	0.0640	0.0640	0.0790	0.0790	0.1090	0.1090	0.1380
	STEEL 2	0.0640	0.0640	0.0640	0.0640	0.0640	0.0640	0.0640	0.0640	0.0790	0.0790	0.1090	0.1090
	ALUM 1	0.0750	0.1050	0.1050	0.1050	0.1050	0.1050	0.1350	0.1350	0.1350	0.1350		
	ALUM 2	0.0600	0.0600	0.0600	0.0600	0.0750	0.0750	0.1050	0.1050	0.1050	0.1350		
42	CONCRETE	III	III	IV	V	V	V	V	V	V	V	V	
	STEEL 1	0.0640	0.0640	0.0640	0.0640	0.0640	0.0640	0.0640	0.0790	0.1090	0.1090	0.1380	0.1380
	STEEL 2	0.0640	0.0640	0.0640	0.0640	0.0640	0.0640	0.0640	0.0790	0.1090	0.1090	0.1090	0.1380
	ALUM 1	0.1050	0.1050	0.1350	0.1350	0.1640	0.1640						
	ALUM 2	0.0600	0.0600	0.0600	0.0750	0.0750	0.1050	0.1050	0.1050	0.1350	0.1350		
48	CONCRETE	III	III	IV	V	V	V	V	V	V	V	V	
	STEEL 1	0.0640	0.0640	0.0640	0.0640	0.0640	0.0640	0.0790	0.1090	0.1090	0.1380	0.1380	0.1680
	STEEL 2	0.0640	0.0640	0.0640	0.0640	0.0640	0.0640	0.0640	0.0790	0.1090	0.1090	0.1380	0.1380
	ALUM 1	0.1050	0.1050	0.1350	0.1640	0.1640	0.1640						
	ALUM 2	0.0600	0.0600	0.0600	0.0750	0.0750	0.1050	0.1050	0.1350	0.1350	0.1640	0.1640	
54	CONCRETE	III	III	IV	V	V	V	V	V	V	V	V	
	STEEL 1	0.0790	0.0790	0.0790	0.0790	0.0790	0.0790	0.0790	0.1090	0.1380	0.1380	0.1680	
	STEEL 2	0.0640	0.0640	0.0640	0.0640	0.0640	0.0640	0.0790	0.1090	0.1090	0.1380	0.1380	0.1680
	ALUM 1	0.1050	0.1050	0.1350	0.1640	0.1640	0.1640						
	ALUM 2	0.0600	0.0600	0.0600	0.0750	0.0750	0.1050	0.1350	0.1350	0.1640	0.1640		
60	CONCRETE	III	III	IV	V	V	V	V	V	V	V	V	
	STEEL 1	0.1090	0.1090	0.1090	0.1090	0.1090	0.1090	0.1090	0.1090	0.1380	0.1680		
	STEEL 2	0.0640	0.0640	0.0640	0.0640	0.0640	0.0790	0.0790	0.1090	0.1380	0.1380	0.1680	0.1680
	ALUM 1	0.1350	0.1350	0.1640	0.1640	0.1640	0.1640						
	ALUM 2	0.0600	0.0600	0.0750	0.1050	0.1050	0.1350	0.1350	0.1640	0.1640			
66	CONCRETE	III	III	IV	V	V	V	V	V	V	V		
	STEEL 1	0.1380	0.1380	0.1380	0.1380	0.1380	0.1380	0.1380	0.1380	0.1680	0.1680		
	STEEL 2	0.0640	0.0640	0.0640	0.0640	0.0640	0.0790	0.1090	0.1090	0.1380	0.1680	0.1680	
	ALUM 1	0.1640	0.1640	0.1640	0.1640	0.1640							
	ALUM 2	0.0750	0.0750	0.1050	0.1050	0.1350	0.1350	0.1640	0.1640				
72	CONCRETE	III	III	IV	V	V	V	V	V	V	V		
	STEEL 1	0.1380	0.1380	0.1380	0.1380	0.1380	0.1380	0.1380	0.1380	0.1680			
	STEEL 2	0.0640	0.0640	0.0640	0.0640	0.0790	0.1090	0.1090	0.1380	0.1380	0.1680		
	ALUM 1	0.1640	0.1640	0.1640	0.1640	0.1640							
	ALUM 2	0.0750	0.0750	0.1050	0.1050	0.1350	0.1640	0.1640	0.1640				
78	CONCRETE	III	III	IV	V	V	V	V	V	V			
	STEEL 1	0.1680	0.1680	0.1680	0.1680	0.1680	0.1680	0.1680	0.1680				
	STEEL 2	0.0640	0.0640	0.0640	0.0640	0.0790	0.1090	0.1090	0.1380	0.1680	0.1680		
	ALUM 2	0.0750	0.0750	0.1050	0.1050	0.1350	0.1640	0.1640					
84	CONCRETE	III	III	IV	V	V	V	V	V	V			
	STEEL 1	0.1680	0.1680	0.1680	0.1680	0.1680	0.1680	0.1680	0.1680				
	STEEL 2	0.0640	0.0640	0.0640	0.0790	0.0790	0.1090	0.1090	0.1380	0.1680			
	ALUM 2	0.1050	0.1050	0.1050	0.1350	0.1350	0.1640	0.1640					
90	CONCRETE	III	III										
	STEEL 2	0.0640	0.0640	0.0640	0.0790	0.1090	0.1090	0.1380	0.1380	0.1680			
	ALUM 2	0.1050	0.1050	0.1350	0.1350	0.1640	0.1640						
96	CONCRETE	III	III										
	STEEL 2	0.0790	0.0790	0.0790	0.0790	0.1090	0.1090	0.1380	0.1680				
	ALUM 2	0.1050	0.1050	0.1350	0.1350	0.1640							
102	CONCRETE	III	III										
	STEEL 2	0.0790	0.0790	0.0790	0.1090	0.1090	0.1380	0.1380	0.1680				
	ALUM 2	0.1350	0.1640	0.1640									
108	CONCRETE	III	III										
	STEEL 2	0.1090	0.1090	0.1090	0.1090	0.1090	0.1380	0.1380	0.1680				
	ALUM 2	0.1350	0.1640										
114	CONCRETE	III	III										
	STEEL 2	0.1090	0.1090	0.1090	0.1090	0.1090	0.1380	0.1680					
	ALUM 2	0.1640	0.1640										
120	CONCRETE	III	III										
	STEEL 2	0.1090	0.1090	0.1090	0.1090	0.1380	0.1380	0.1680					
	ALUM 2	0.1640	0.1640										

IMPERFECT BACKFILL IS NOT REQUIRED FOR CONDITIONS SHOWN ON THE LEFT SIDE OF THE HEAVY LINE. USE NORMAL BACKFILL.

FOR CONDITIONS TO THE RIGHT OF THE HEAVY LINE CLASS V CONCRETE PIPE REQUIRES IMPERFECT BACKFILL ACCORDING TO DETAIL "A" OR "B" ON STD. 230

1. STEEL 1 OR ALUM 1 DENOTES CORRUGATION PROFILE 2 2/3" X 1/2"
2. STEEL 2 OR ALUM 2 DENOTES CORRUGATION PROFILE 3" X 1" (OR 5" X 1" FOR STEEL PIPE ONLY)
3. MINIMUM COVER VALUES APPLY TO HS-20 LIVE LOAD. MINIMUM COVER NEEDED FOR CONSTRUCTION VEHICLES MAY BE GREATER AND IS THE RESPONSIBILITY OF THE CONTRACTOR.
4. TRENCH CONSTRUCTION IS REQUIRED FOR CONDITIONS ON BOTH SIDES OF HEAVE LINE. SEE STD. 230.
5. FOR CONDITIONS TO THE RIGHT OF THE HEAVY LINE, CONCRETE PIPE REQUIRES IMPERFECT BACKFILL ACCORDING TO SPECIFICATIONS AND THIS STANDARD.
6. TABLE VALUES FOR ALUMINUM CORRUGATED PIPE (OR ALUMINUM SPIRAL RIB PIPE) ARE COMPUTED BASED UPON ALCLAD ALLOY 3004-H34 HAVING MINIMUM YIELD STRENGTH, fy=24,000 PSI. IF ALUMINUM PIPE IS OTHERWISE FURNISHED AS 3004-H32 (fy=20,000 PSI), THE TABLE NO.1 ALLOWABLE FILL HEIGHTS SHALL BE ADJUSTED AS FOLLOWS:

   A. ALL MINIMUM COVER SHALL BE INCREASED BY 15 PERCENT. (EXAMPLE: 12 INCHES BECOMES 13.8 INCHES)
   B. ALL HEIGHT OF FILL VALUES SHALL BE DECREASED BY 15 PERCENT. (EXAMPLE: 35-40 FEET BECOMES 29.7-34.0 FEET)

DATE	REVISION	BY

THE CITY OF ALPHARETTA GEORGIA

PIPE CULVERT DATA

08/01/2015

STD. 231

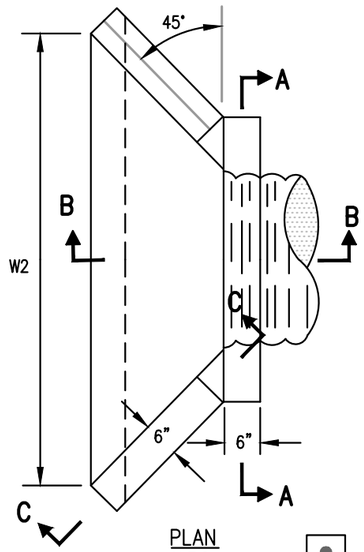

PLAN
N.T.S.

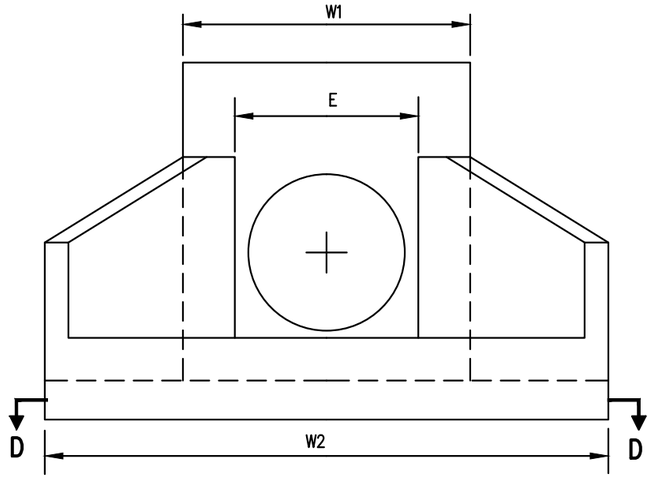

FRONT ELEVATION
INLET HEADWALL
N.T.S.

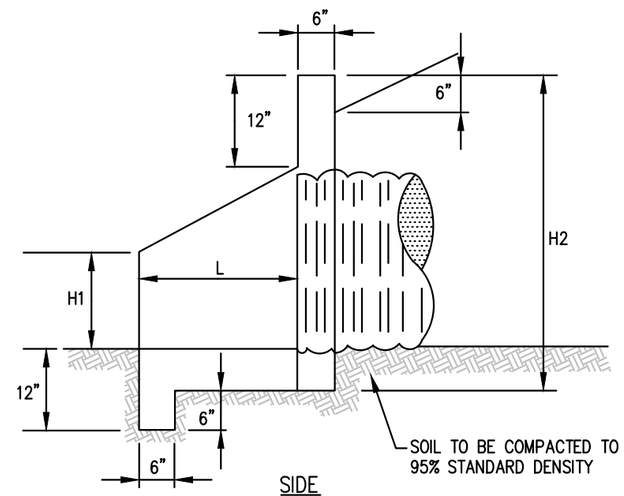

SIDE
N.T.S.

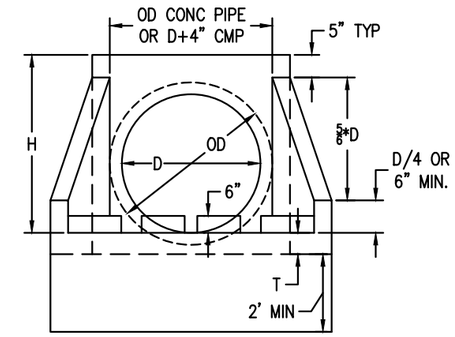

FRONT ELEVATION
N.T.S.

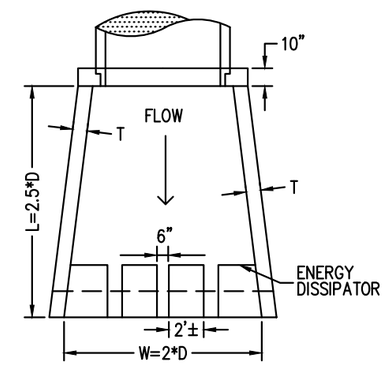

PLAN VIEW
N.T.S.

OUTLET HEADWALL
N.T.S.

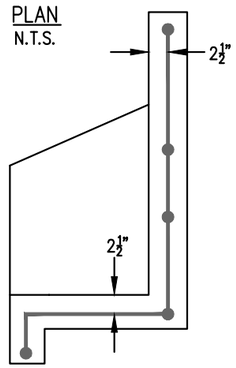

SECTION B–B
BASE & WALL SECTION
N.T.S.

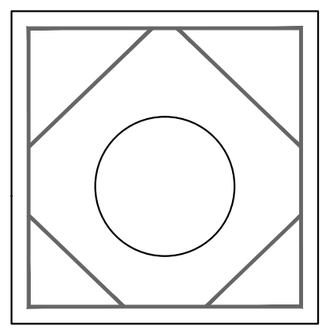

SECTION A–A
WALL SECTION
N.T.S.

NOTE:
HEADWALLS OVER 30" TO HAVE STEEL ON 6" CENTERS EACH WAY (2" CLEARANCE TYP.)

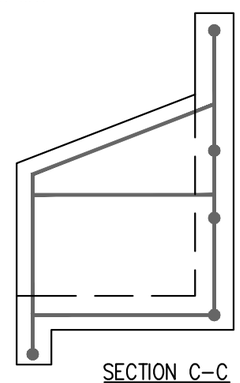

SECTION C–C
WING SECTION
N.T.S.

OUTLET HEADWALL NOTES:
D = INSIDE DIAMETER OF PIPE
OD = OUTSIDE DIAMETER OF PIPE
H = D + 10" MIN FOR CMP
H = D + PIPE WALL THICKNESS + 8" FOR CONC PIPE
(13/12*D + 9" TYP)
T = 8" FOR D = 72" OR LESS
T = 10" FOR D = OVER 72"

INLET HEADWALL DIMENSIONS FOR METAL PIPE*								
INSIDE DIA. OF PIPE	W1	W2	H1	H2	L	E	WT.	SQ. FT. IN BASE AREA
18"*	3'–2"	4'–3"	1'–3"	3'–2"	1'–3"	1'–9"	1,550	7.34
21", 24"	3'–8"	5'–3"	1'–9"	3'–8"	1'–6"	2'–3"	2,100	9.90
30"	4'–2"	6'–5"	2'–0"	4'–2"	1'–10"	2'–9"	2,850	13.50
36"	4'–8"	7'–7"	2'–4"	4'–8"	2'–2"	3'–3"	3,700	17.65
42", 48"	5'–8"	10'–1"	3'–3"	5'–8"	2'–11"	4'–3"	5,600	28.60
54"	6'–8"	11'–11"	3–8"	6'–8"	3'–4"	5'–3"	7,500	35.60

NOTE: USE NEXT LARGER SIZE FOR CONCRETE PIPE

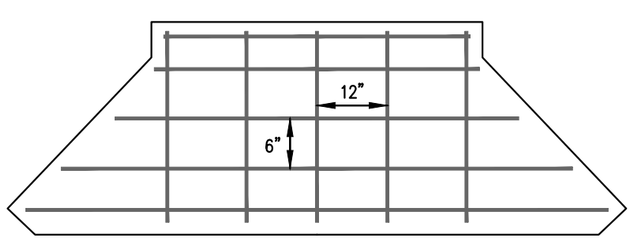

SECTION D–D
BASE SECTION
N.T.S.

NOTES:
1. ALL CONC. SHALL BE 4000 P.S.I.
2. REINFORCEMENT STEEL SHALL BE 1/2" INTERMEDIATE GRADE.
3. CHAMFER ALL EXPOSED EDGES 3/4"
4. ENERGY DISSIPATOR REQ'D ON PIPES OVER 30" DIA.
5. RIP RAP TO BE PLACED AT OUTLET, APRON TO BE SIZED PER GEORGIA MANUAL FOR EROSION & SEDIMENT CONTROL.
6. FOR PIPES LARGER THAN 54" USE GDOT STD. #2530P AND #2535P.
7. ALL OPEN DRAINAGE SWALES MUST BE DRESSED PER GEORGIA MANUAL FOR EROSION & SEDIMENT CONTROL.

THE CITY OF ALPHARETTA GEORGIA

BY	REVISION	DATE

PRECAST CONCRETE HEADWALL SYSTEM

08/01/2015

STD. 232

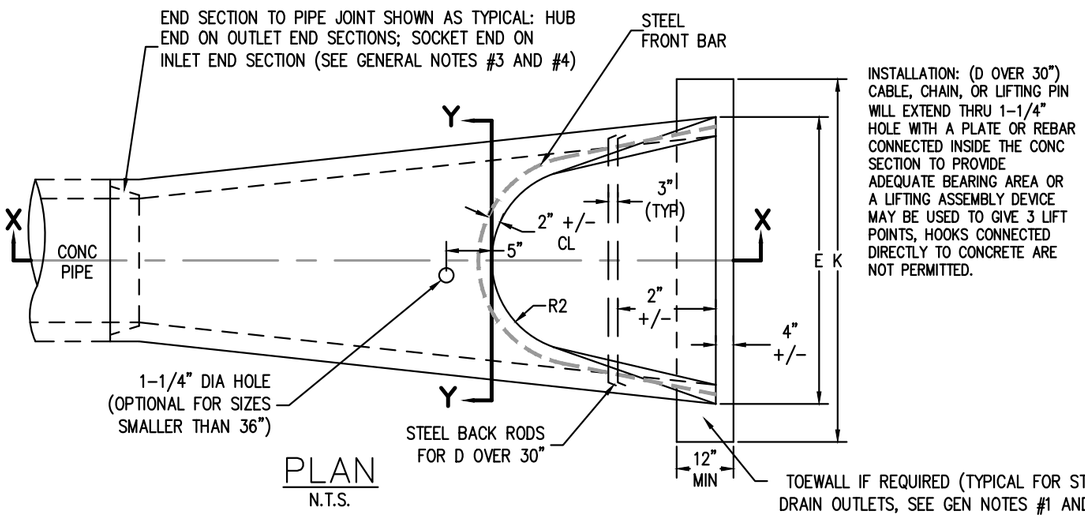

PLAN
N.T.S.

NOTE: DO NOT CUT CONCRETE PIPE. USE THE FULL LENGTH SECTIONS ONLY. WARP SLOPE TO CONFORM WITH PIPE LENGTH AND END SECTION.

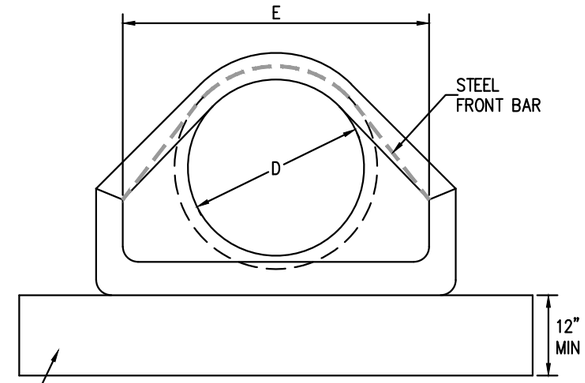

FRONT
N.T.S.

GENERAL NOTES:

1. TOEWALLS ARE FOR OUTLETS OF STORM DRAINS, EXCEPT WHERE CONCRETE DITCH PAVING OR OTHER EROSION PROTECTION IS PROVIDED OR WHERE THE OUTLET VELOCITY IS LESS THAN 8FT/SEC. TOEWALLS ARE NOT REQUIRED FOR SIDE DRAINS, SLOPE DRAINS, OR INLETS OF STORM DRAINS. THIS CRITERIA MAY BE VARIED WHERE SPECIFIED BY THE DESIGNER.
2. TOEWALL DIMENSIONS ARE NOMINAL. TOEWALLS CONSTRUCTED WITH ALTERNATE MATERIALS TO HAVE APPROXIMATELY THE SAME DIMENSIONS AS INDICATED FOR RIPRAP. TOEWALLS CONSTRUCTED WITH CONCRETE MAY BE TRENCH FORMED. PLACEMENT OF RIPRAP MAY DIFFER FROM DETAILS SHOWN IF APPROVED BY ENGINEER OF RECORD.
3. CONTRACTOR WILL INFORM PRODUCER IF CONCRETE FLARED END SECTION IS FOR INLET OR FOR OUTLET END. SOCKET (TONGUE OR SPIGOT) END IS REQUIRED FOR INLETS. HUB (GROOVE OR BELL) END IS REQUIRED FOR OUTLETS. SOCKET TO SOCKET OR HUB TO HUB JOINT WILL NOT BE ACCEPTED UNLESS A REINFORCED CONCRETE COLLAR IS BUILT AROUND THE JOINT. FLARED END SECTIONS SHALL BE JOINTED TO PIPE WITH ALL SPACE IN THE JOINT FILLED WITH EITHER BITUMINOUS PLASTIC CEMENT OR PREFORMED PLASTIC GASKET.
4. WALL THICKNESS (T) IS SHOWN AS NOMINAL AND MAY BE INCREASED AT PRODUCER'S OPTION FOR DESIRED JOINT DESIGN OR TO ALLOW A FLAT OUTSIDE BOTTOM ON THE FLARE WITH THE INSIDE DIMENSIONS OF FLARE RETAINED AS SHOWN. (T=PIPE WALL THICKNESS (0.0833D+1" TYPICAL)).
5. CENTERLINE OF FLARED END SECTION WILL ALIGN WITH CENTERLINE OF PIPE. IF PIPE IS SKEWED, THE EMBANKMENT SLOPE WILL BE WARPED TO CONFORM WITH END SECTION.

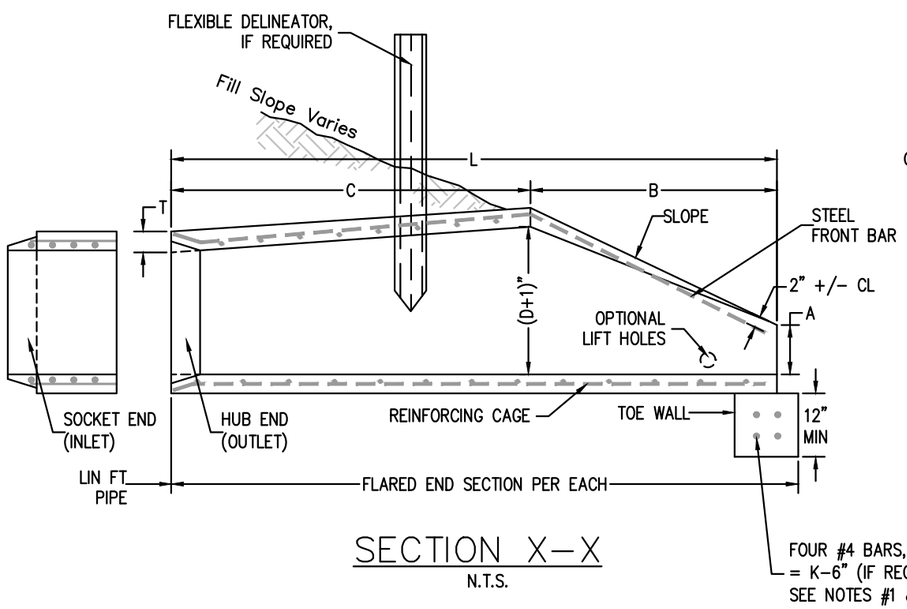

SECTION X-X
N.T.S.

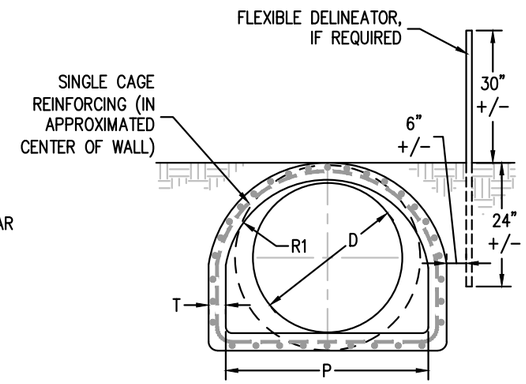

SECTION Y-Y
N.T.S.

DIMENSIONS AND REINFORCING FOR CONCRETE PLARED END SECTION (+/- 1" TOLERANCE) — OUTLET TOEWALL (IF REQ'D)

PIPE DIA.	FRONT BAR	BACK RODS	SLOPE (+/-)	A	B	C*	L*	E	P	R1	R2	K=E+2'	CU YDS. CONC.
12"	1 - #3 x 5' 4"	NOT REQD.	2.2:1	4"	2' - 0"	4' - 1"	6' - 1"	2' - 0"	1' - 8"	0' - 10"	0' - 9"	4' - 0"	0.15
15"	1 - #3 x 6' 0"	NOT REQD.	2.2:1	6"	2' - 3"	3' - 10"	6' - 1"	2' - 6"	2' - 0"	1' - 0"	0' - 11"	4' - 6"	0.17
18"	1 - #3 x 7' 2"	NOT REQD.	2.2:1	9"	2' - 3"	3' - 10"	6' - 1"	3' - 0"	2' - 5"	1' - 4"	1' - 0"	5' - 0"	0.19
24"	1 - #3 x 9' 10"	NOT REQD.	2.4:1	10"	3' - 8"	2' - 6"	6' - 2"	4' - 0"	2' - 9"	1' - 5"	1' - 2"	6' - 0"	0.22
30"	1 - #4 x 11' 8"	NOT REQD.	2.4:1	12"	4' - 6"	1' - 8"	6' - 2"	5' - 0"	3' - 1"	1' - 6"	1' - 3"	7' - 0"	0.26
36"	1 - #4 x 13' 10"	2 - #4 x 6' 3"	2.4:1	15"	5' - 3"	2' - 11"	8' - 2"	6' - 0"	4' - 0"	2' - 0"	1' - 8"	8' - 0"	0.30
42"	1 - #4 x 13' 10"	2 - #4 x 7' 4"	2.4:1	21"	5' - 3"	2' - 11"	8' - 2"	6' - 6"	4' - 6"	2' - 4"	1' - 10"	8' - 6"	0.32

TOEWALL DIMENSIONS AND QUANTITIES

D	J	K	ALTERNATE MATERIALS AND QUANTITIES: SAND CEMENT BAG RIPRAP 8" THICK		CONCRETE (CL A OR B) OR MORTAR RUBBLE MASONRY		STONE GROUT RIPRAP OR STONE DUMP RIPRAP	
			NO. BAGS	SQ. YARDS	CU. FT.	CU. YDS.	THICKNESS	SQ. YDS.
18"	8"	4'	4	0.667	4	0.148	8"	0.667
24"	16"	9'	9	1.500	10	0.370	16"	0.833
30"	16"	11'	11	1.833	12	0.444	16"	1.000
36"	16"	13'	16	2.167	14	0.518	16"	1.166
42"	16"	15'	15	2.500	16	0.592	16"	1.333

REINFORCING CAGE NOTES:

1. WIRE FABRIC HAVING EQUAL STEEL AREA AS INNER CAGE FOR CLASS II PIPE, AASHTO M-170.
2. ALTERNATE: #3 BARS SPACED 12"+ LONGITUDINALLY WITH #2 BARS TRANSVERSELY AT 6" O.C. MAX SPACING, SPOT WELDED OR TIED TO FROM CAGE. (BACK RODS MAY BE OMITTED.)

THE CITY OF ALPHARETTA GEORGIA

BY	REVISION	DATE

CONCRETE PIPE FLARED END SECTION

08/01/2015

STD. 233

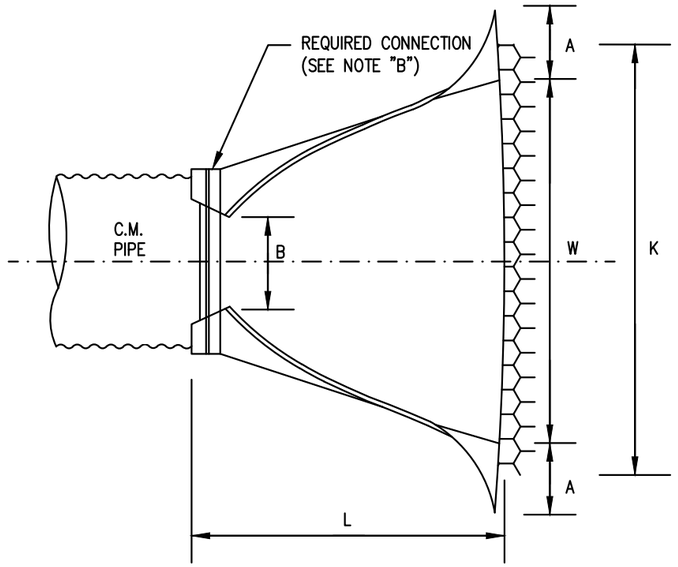

PLAN
N.T.S.

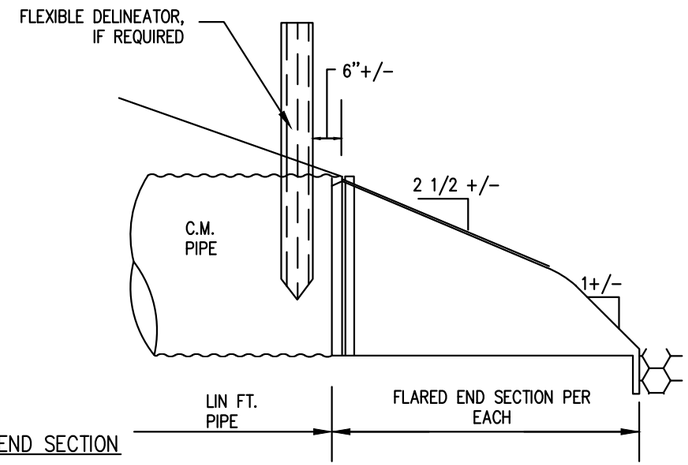

METAL PIPE FLARED END SECTION
N.T.S.
FOR USE ONLY WITH CORRUGATED METAL PIPE

FRONT
N.T.S.

GENERAL NOTES:

1. TOEWALLS ARE FOR OUTLETS OF STORM DRAINS, EXCEPT WHERE CONCRETE DITCH PAVING OR OTHER EROSION PROTECTION IS PROVIDED OR WHERE THE OUTLET VELOCITY IS LESS THAN 8FT/SEC. TOEWALLS ARE NOT REQUIRED FOR SIDE DRAINS, SLOPE DRAINS, OR INLETS OF STORM DRAINS. THIS CRITERIA MAY BE VARIED WHERE SPECIFIED BY THE DESIGNER.
2. TOEWALL DIMENSIONS ARE NOMINAL. TOEWALLS CONSTRUCTED WITH ALTERNATE MATERIALS TO HAVE APPROXIMATELY THE SAME DIMENSIONS AS INDICATED FOR RIPRAP. TOEWALLS CONSTRUCTED WITH CONCRETE MAY BE TRENCH FORMED. PLACEMENT OF RIPRAP MAY DIFFER FROM DETAILS SHOWN IF APPROVED BY ENGINEER OF RECORD.
3. CENTERLINE OF FLARED END SECTION WILL ALIGN WITH CENTERLINE OF PIPE. IF PIPE IS SKEWED, THE EMBANKMENT SLOPE WILL BE WARPED TO CONFORM WITH END SECTION.
4. GALVANIZED STEEL FLARED END SECTIONS ARE TO BE USED ONLY WITH CORRUGATED STEEL PIPE AND ALUMINUM FLARED END SECTIONS ARE TO BE USED ONLY WITH CORRUGATED ALUMINUM PIPE.
5. WHERE METAL FLARED END SECTIONS ARE USED WITH MULTIPLE PIPE LINES, THE STANDARD SPACING BETWEEN PIPES (S=D OR 3 FT.) MAY HAVE TO BE INCREASED (S=1.75 TYPICAL) TO PREVENT OVERLAP OF END SECTION WINGTIPS.
6. SLOPE DRAIN PIPES WILL REQUIRE AN ELBOW FOR CONNECTION TO THE FLARED END SECTION.

TOEWALL DIMENSIONS AND QUANTITIES

D	J	K	ALTERNATE MATERIALS AND QUANTITIES					
			SAND CEMENT BAG RIPRAP 8" THICK		CONCRETE (CL A OR B) OR MORTAR RUBBLE MASONRY		STONE GROUT RIPRAP OR STONE DUMP RIPRAP	
			NO. BAGS	SQ. YARDS	CU. FT.	CU. YDS.	THICKNESS	SQ. YDS.
18"	8"	4'	4	0.667	4	0.148	8"	0.667
24"	16"	9'	9	1.500	10	0.370	16"	0.833
30"	16"	11'	11	1.833	12	0.444	16"	1.000
36"	16"	13'	16	2.167	14	0.518	16"	1.166
42"	16"	15'	15	2.500	16	0.592	16''	1.333

NOTE "B"

THE CONNECTION BETWEEN METAL FLARED END SECTION AND C.M. PIPE WILL BE ONE OF THE FOLLOWING:

1. A STRAP BAND OR THREADED ROD PROVIDED BY THE MANUFACTURER WILL LOCK END SECTION ONTO PIPE. A CORRUGATION AT THE PIPE END WILL BE NON-SPIRALED (PERPENDICULAR TO CENTER OF PIPE)
2. A DIMPLE BAND COLLAR WILL BE SHOP BOLTED TO END SECTION, PIPE WILL BE INSERTED INTO THE BAND COLLAR TO MEET THE END SECTION.
3. A STUB PIPE WILL BE RIVETED TO THE END SECTION AND THE MAIN PIPE CONNECTED TO THE STUB WITH A NORMAL CONNECTION BAND.
4. OTHER TYPE CONNECTION IF RECOMMENDED BY MANUFACTURER AND APPROVED BY THE CITY ENGINEER.

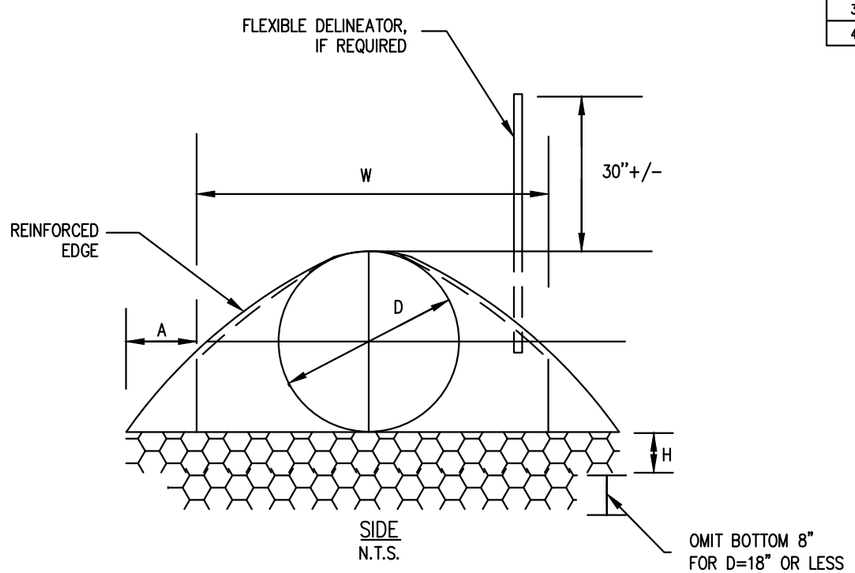

SIDE
N.T.S.

FLARED END SECTION DIMENSIONS

PIPE SIZE "D"	THICKNESS		A=0.40 +/- 1"	B+0.50 +/- 1"	H=0.25D +/- 1" (6" MIN)	L=1.67D +/- 1½"	W=2.00 +/- 2"
	GALV. STEEL	ALUM.					
18"	.064"	.060"	7"	9"	6"	2'-6"	3'-0"
24"	.064"	.060"	9"	1'-0"	6"	3'-4"	4'-0"
30"	.079"	.105"	1'-0"	1'-3"	7"	4'-2"	5'-0"
36"	.079"	.105"	1'-2"	1'-6"	9"	5'-0"	6'-0"
42"	.109"	.164"	1'-5"	1'-9"	10"	5'-10"	7'-0"

THE CITY OF ALPHARETTA GEORGIA

BY	REVISION	DATE

METAL PIPE
FLARED END SECTION

08/01/2015

STD. 234

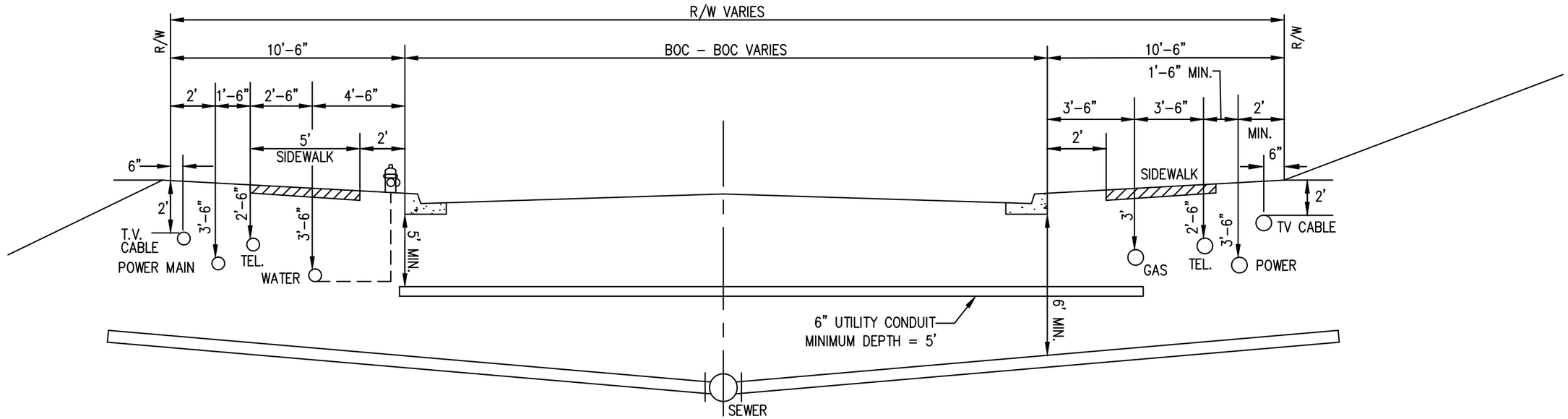

WIDE SHOULDERS
N.T.S.

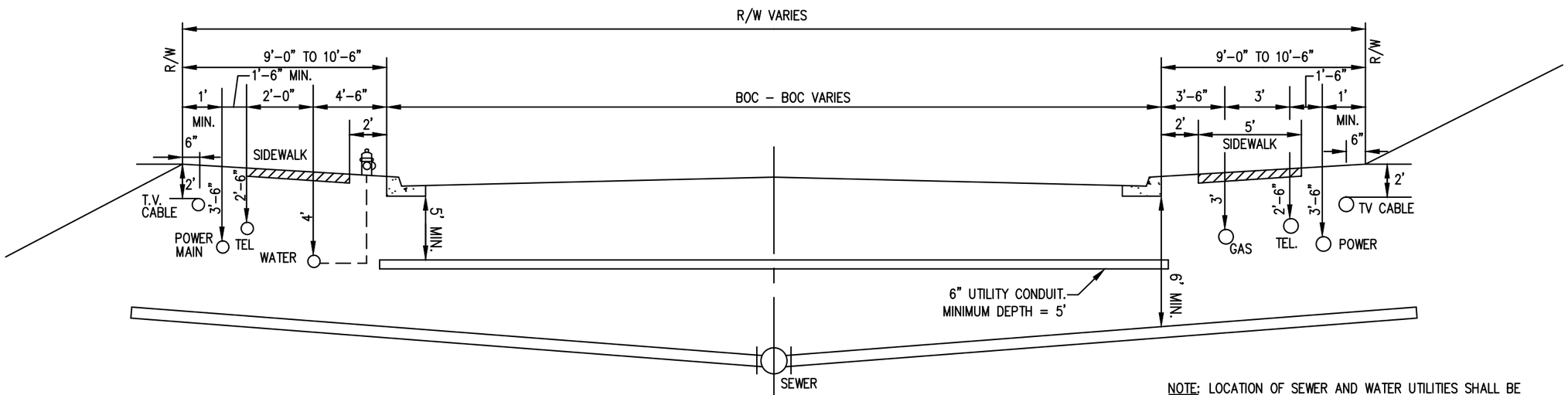

NARROW SHOULDERS
N.T.S.

NOTE: LOCATION OF SEWER AND WATER UTILITIES SHALL BE PER FULTON COUNTY STANDARD DETAILS AND SPECIFICATIONS.

THE CITY OF ALPHARETTA GEORGIA

BY	REVISION	DATE

TYPICAL UNDERGROUND UTILITY CROSS SECTION

08/01/2015

STD. 400

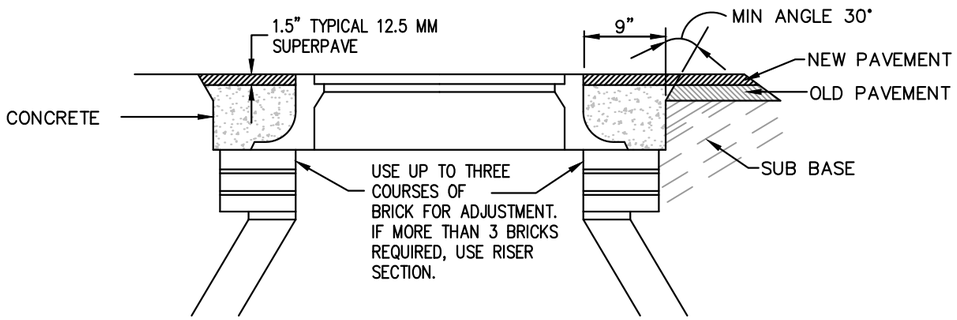

MANHOLE
N.T.S.

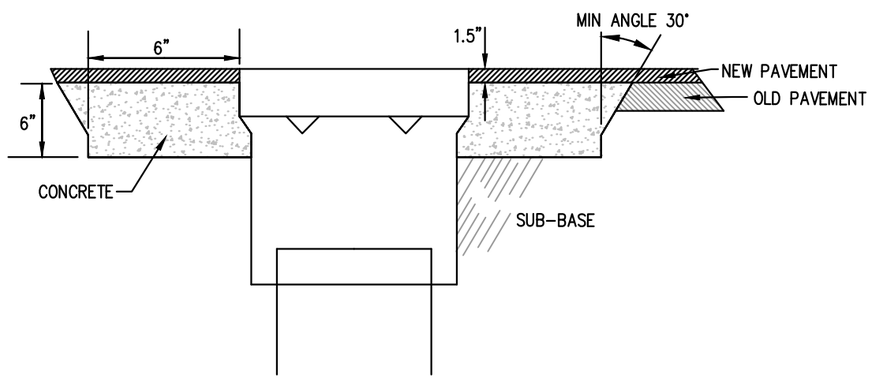

VALVE STRUCTURE ADJUSTMENT DETAILS
N.T.S.

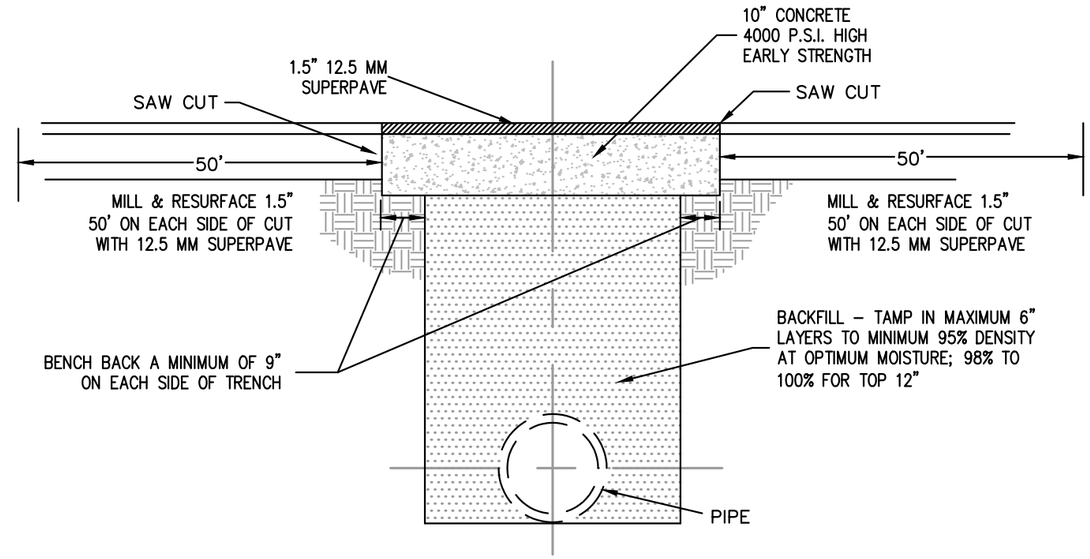

BACKFILLING UTLITY CUT
N.T.S.

NOTES:

1. STRUCTURES SHALL NOT BE ADJUSTED FOR A PERIOD OF AT LEAST 24 HOURS AFTER RESURFACING IS COMPLETED IN THAT AREA.
2. ASPHALT SHALL BE CUT SO AS TO MAKE A SMOOTH, EVEN EDGE.
3. STRUCTURE COVER SHALL BE ADJUSTED TO FIT FLUSH WITH STREET SURFACE.
4. ALL CONCRETE SHALL BE 4000 P.S.I. HIGH EARLY STRENGTH, UNLESS NOTED OTHERWISE.
5. CONCRETE SHALL BE USED TO BACKFILL THE ENTIRE WORKING AREA BETWEEN BACKS OF CURBS.
6. FINISHING CONCRETE SHALL BE DONE BY USE OF TROWEL OR FLOAT.
7. SANITARY SEWER MANHOLES MUST BE VENTED IMMEDIATELY AFTER BEING PAVED OVER. THEREFORE, WHEN MORE THAN ONE LIFT OF ASPHALT IS TO BE PLACED, THE CONTRACTOR MAY ADJUST STRUCTURE PRIOR TO PAVING.
8. ALL STREET CUTS MUST BE COVERED WITH STEEL PLATES OF SUFFICIENT THICKNESS TO SPAN THE CUT WITHOUT NOTICEABLE DEFLECTION. PLATES TO REMAIN IN PLACE UNTIL THE CONCRETE BASE HAS GAINED SUFFICIENT STRENGTH TO WITHSTAND TRAFFIC LOADS (24 HR. MINIMUM).

LONGITUDINAL UTILITY CUTS:
ALL LONGITUDINAL UTILITY CUTS SHALL BE REQUIRED TO MILL AND RESURFACE THE ENTIRE LANE OF TRAVEL FOR THE LENGTH OF THE TRENCH PLUS 50' ON EACH END OF THE TRENCH. LONGITUDINAL UTILITY TRENCHES ALONG THE CENTERLINE OF A ROADWAY SHALL BE REQUIRED TO MILL AND RESURFACE BOTH TRAVEL LANES FOR THE LENGTH OF THE TRENCH PLUS 50' ON EACH END OF THE TRENCH. THE REQUIRED DEPTH OF MILLING SHALL BE 1.5" AND RESURFACING SHALL BE PERFORMED WITH 12.5 MM SUPERPAVE.

THE CITY OF ALPHARETTA GEORGIA			UTILITY CUT STRUCTURE ADJUSTMENT
			08/01/2015
BY	REVISION	DATE	STD. 401

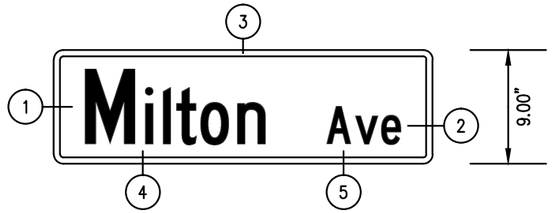

POST MOUNTED SIGN

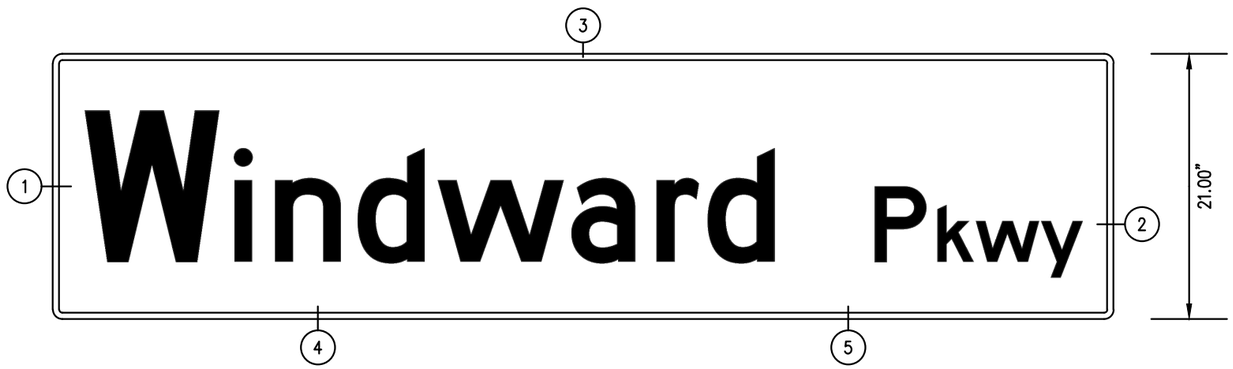

OVERHEAD SIGN

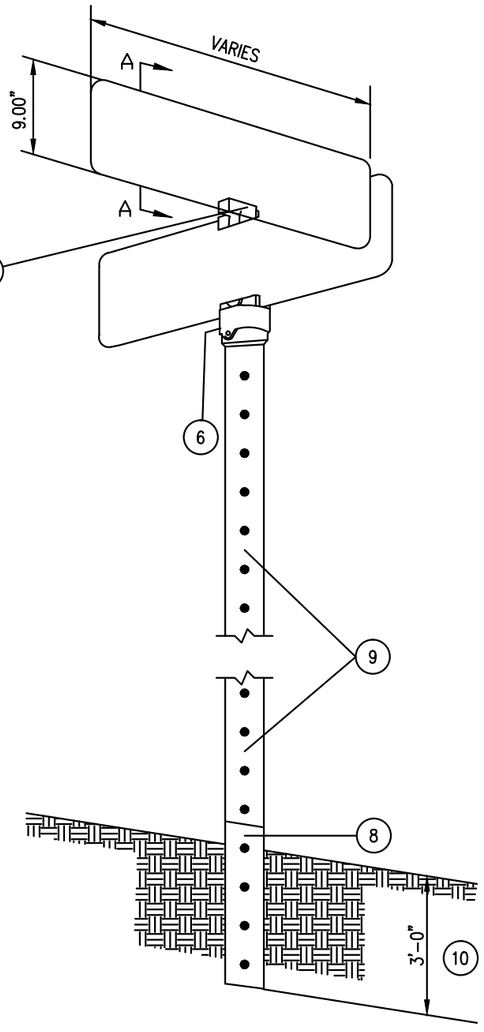

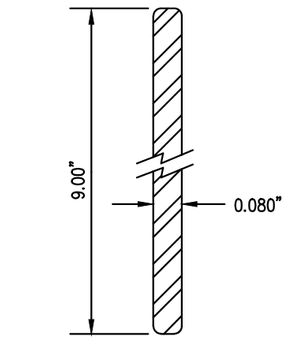

SIGN TO HAVE MILL FINISH WITH 3/4" RADIUS FLAT BLADE WITH NO HOLES

SECTION A–A
N.T.S.

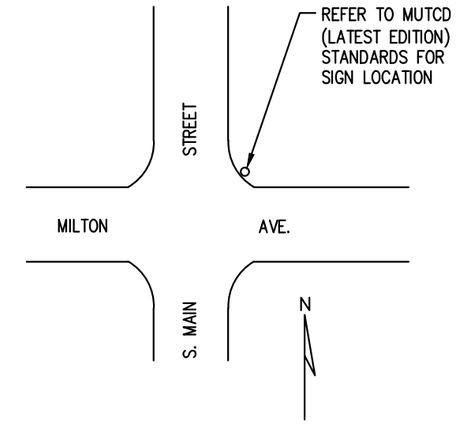

1. REFER TO TABLE BELOW FOR PRIMARY SIZING
2. REFER TO TABLE BELOW FOR SUFFIX & PREFIX SIZING
3. PROVIDE 1/2" WHITE BORDER AROUND EDGE
4. STREET NAME SIGN SHALL BE 3M HIGH INTENSITY PRISMATIC (3M 3930) OR EQUAL
5. STREET NAME SIGN SHALL HAVE ELECTRO–CUTTABLE (EC FILM) TRANSPARENT GREEN MATERIAL INSTALLED OVER BACKING.
6. VULCAN VS–4 U.C. CAP FOR 2" SQUARE POST OR EQUAL
7. VULCAN VS–4 CROSS OR EQUAL
8. BASE POST SQUARE 2–1/4" X 3', 12 GAUGE (BASE POST SHALL NOT EXTEND MORE THAN 6" ABOVE GRADE)
9. SQUARE POST 2" X 10', 12 GAUGE
10. BASE POST SHALL BE DRIVEN 3'–0" BELOW FINISHED GRADE.

TYPE OF MOUNTING	TYPE OF STREET OR HIGHWAY	SPEED LIMIT	PRIMARY LETTER HEIGHT		SUFFIX & PREFIX LETTER HEIGHT		FONT	SIGN SIZE
			INITIAL UPPER–CASE	LOWER–CASE	INITIAL UPPER–CASE	LOWER–CASE		
OVERHEAD	ALL TYPES	ALL SPEED LIMITS	12 INCHES	9 INCHES	6 INCHES	4.5 INCHES	FHWA SERIES D 2000	21" X VARIES*
POST–MOUNTED	MULTI–LANE	MORE THAN 40 MPH	8 INCHES	6 INCHES	4 INCHES	3 INCHES	FHWA SERIES C 2000	9" X VARIES*
POST–MOUNTED	MULTI–LANE	40 MPH OR LESS	6 INCHES	4.5 INCHES	3 INCHES	2.25 INCHES	FHWA SERIES C 2000	9" X VARIES*
POST–MOUNTED	2–LANE	ALL SPEED LIMITS	6 INCHES	4.5 INCHES	3 INCHES	2.25 INCHES	FHWA SERIES C 2000	9" X VARIES*

*SIGN WIDTH SHALL BE DETERMINED BY THE LENGTH OF SIGN LEGEND.

NOTE:
WHERE APPLICABLE, STREET NAME SIGN SHALL BE INSTALLED IN CONJUNCTION WITH STOP SIGN. REFER TO MUTCD STANDARDS.

THE CITY OF ALPHARETTA GEORGIA

BY	REVISION	DATE
GS	MUTCD COMPLIANCE	12/22/15

STREET NAME SIGN

08/01/2015

STD. 900

TYPE I PAVEMENT SECTION: AVERAGE DAILY TRAFFIC (ADT) – 1000 VPD (LOCAL RESIDENTIAL STREET)				
	MATERIAL TYPE	TOTAL THICKNESS (INCHES)	MAX LIFT THICKNESS (INCHES)	NOTES
A	12.5 mm SUPERPAVE	1.5	2.5*	*ALLOW UP TO 4 INCHES THICK FOR DRIVEWAY AND SIDE ROAD TRANSITION
B	19 mm SUPERPAVE	2.0	3*	*ALLOW UP TO 6 INCHES PER LIFT FOR TRENCH WIDENING
C	25 mm SUPERPAVE	–	5*	*ALLOW UP TO 6 INCHES PER LIFT FOR TRENCH WIDENING
D	GRADED AGGREGATE BASE	6	6	COMPACTED TO 100 PERCENT OF THE MODIFIED PROCTOR MAXIMUM DRY DENSITY (AASHTO T180)
E	UPPER 12 INCHES SOIL SUBGRADE	12	–	COMPACTED TO AT LEAST 100 PERCENT OF STANDARD PROCTOR MAXIMUM DRY DENSITY (AASHTO T99)

TYPE II PAVEMENT SECTION: AVERAGE DAILY TRAFFIC (ADT) – 5000, 12000 & 16000 VPD (LOCAL RESIDENTIAL, 2 LANE RESIDENTIAL COLLECTOR & 2–3 LANE COLLECTOR STREETS)				
	MATERIAL TYPE	TOTAL THICKNESS (INCHES)	MAX LIFT THICKNESS (INCHES)	NOTES
A	12.5 mm SUPERPAVE	1.5	2.5*	*ALLOW UP TO 4 INCHES THICK FOR DRIVEWAY AND SIDE ROAD TRANSITION
B	19 mm SUPERPAVE	4	3*	*ALLOW UP TO 6 INCHES PER LIFT FOR TRENCH WIDENING
C	25 mm SUPERPAVE	–	5*	*ALLOW UP TO 6 INCHES PER LIFT FOR TRENCH WIDENING
D	GRADED AGGREGATE BASE	12	6	COMPACTED TO 100 PERCENT OF THE MODIFIED PROCTOR MAXIMUM DRY DENSITY (AASHTO T180)
E	UPPER 12 INCHES SOIL SUBGRADE	12	–	COMPACTED TO AT LEAST 100 PERCENT OF STANDARD PROCTOR MAXIMUM DRY DENSITY (AASHTO T99)

TYPE III PAVEMENT SECTION: AVERAGE DAILY TRAFFIC (ADT) – 18000 & 24000 VPD (4 LANE COLLECTOR & 5 LANE ARTERIAL STREETS)				
	MATERIAL TYPE	TOTAL THICKNESS (INCHES)	MAX LIFT THICKNESS (INCHES)	NOTES
A	12.5 mm SUPERPAVE	1.5	2.5*	*ALLOW UP TO 4 INCHES THICK FOR DRIVEWAY AND SIDE ROAD TRANSITION
B	19 mm SUPERPAVE	3	3*	*ALLOW UP TO 6 INCHES PER LIFT FOR TRENCH WIDENING
C	25 mm SUPERPAVE	5	5*	*ALLOW UP TO 6 INCHES PER LIFT FOR TRENCH WIDENING
D	GRADED AGGREGATE BASE	12	6	COMPACTED TO 100 PERCENT OF THE MODIFIED PROCTOR MAXIMUM DRY DENSITY (AASHTO T180)
E	UPPER 12 INCHES SOIL SUBGRADE	12	–	COMPACTED TO AT LEAST 100 PERCENT OF STANDARD PROCTOR MAXIMUM DRY DENSITY (AASHTO T99)

PAVEMENT NOTES:

1. PROOF–ROLLING OF BOTH THE SUBGRADE AND G.A.B. MUST BE CONDUCTED WITH A GEOTECHNICAL ENGINEER PRESENT. CITY INSPECTOR MUST ALSO BE PRESENT AND SHOULD BE CONTACTED 72 HOURS IN ADVANCE AT 678–297–6200.
2. COPIES OF THE GEOTECHNICAL ENGINEER'S REPORT (INCLUDING COMPACTION TEST RESULTS) ARE REQUIRED TO BE PROVIDED TO THE CITY INSPECTOR. ALL REPORTS MUST BEAR THE SEAL AND SIGNATURE OF A GEORGIA REGISTERED PROFESSIONAL ENGINEER. COMPACTION TESTS ARE REQUIRED AT A MINIMUM OF EVERY 50 LINEAR FEET IN STAGGERED LOCATIONS AND AT ALL UTILITY CROSSINGS.
3. CORE SAMPLES ARE REQUIRED AT A MINIMUM OF EVERY 100 LINEAR FEET OF ROADWAY AND AT ALL UTILITY CROSSINGS. ADDITIONAL CORE SAMPLES MAY BE REQUIRED BY THE CITY INSPECTOR BASED ON FIELD CONDITIONS AND OBSERVATIONS. CORE SAMPLE RESULTS (INCLUDING LIFT THICKNESS AND COMPACTION VALUES FOR ASPHALT AND GAB) ARE REQUIRED TO BE PROVIDED TO THE CITY INSPECTOR.

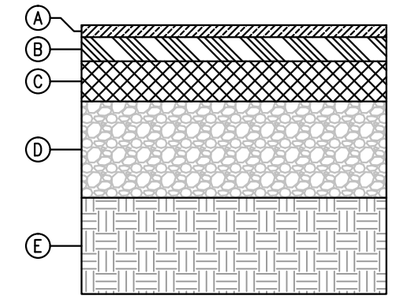

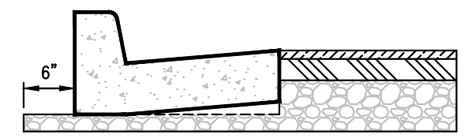

TYPE I PAVEMENT SECTION WITH 24" CURB AND GUTTER

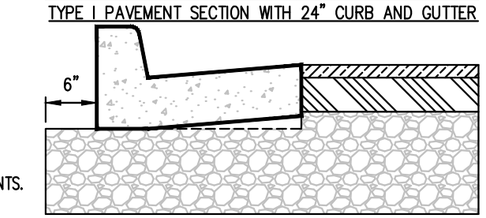

TYPE II PAVEMENT SECTION WITH 24" CURB AND GUTTER

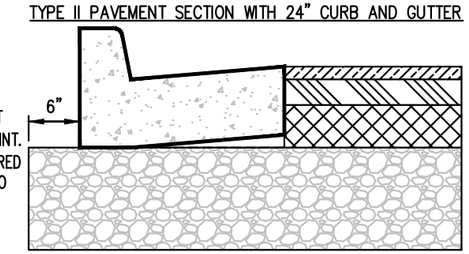

TYPE III PAVEMENT SECTION WITH 24" CURB AND GUTTER

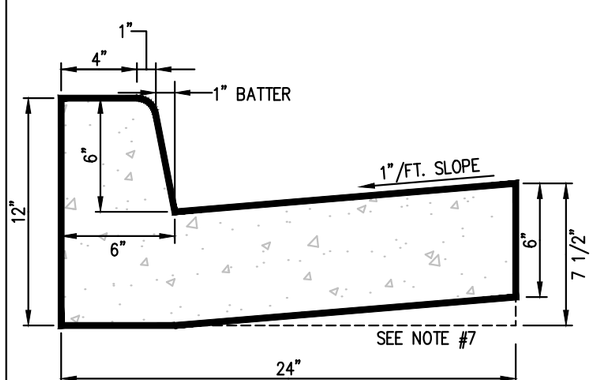

FOR USE WITH TYPE I AND II PAVEMENT SECTIONS
N.T.S.

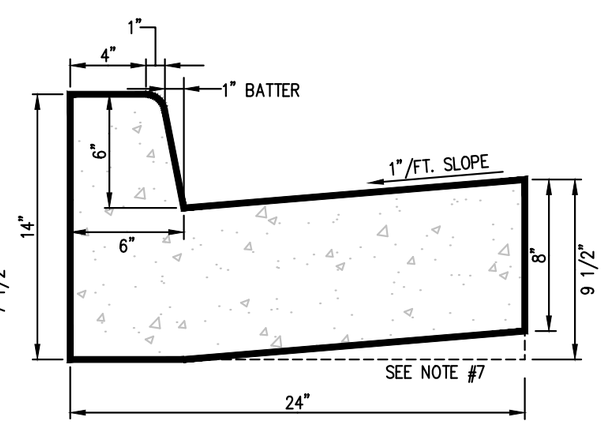

FOR USE WITH TYPE III PAVEMENT SECTION
N.T.S.

CURB AND GUTTER NOTES:

1. ½" PRE–FORMED EXPANSION JOINTS REQUIRED AT ALL STRUCTURES AND RADIUS POINTS.
2. 50' MAXIMUM DISTANCE BETWEEN EXPANSION JOINTS.
3. 10' MAXIMUM DISTANCE BETWEEN CONTRACTION JOINTS.
4. CONCRETE STRENGTH TO BE 3000 P.S.I. WITH A MAXIMUM SLUMP OF 2".
5. CONCRETE FINISH SHALL BE SMOOTHED AND EVENED WITH A WOODEN FLOAT.
6. G.A.B. SHALL EXTEND A MINIMUM OF 6" BEYOND BACK OF CURB.
7. AT CONTRACTOR'S OPTION, THE GUTTER THICKNESS MAY BE INCREASED AT EDGE OF PAVEMENT TO MAKE BOTTOM OF GUTTER PARALLEL WITH PAVING OF BASE COURSE, BUT THE GUTTER THICKNESS MUST NOT BE LESS THAN THE SPECIFIED 6" OR 8" AT ANY POINT.
8. DURING CONSTRUCTION, THE CONTRACTOR'S MATERIALS TESTING AGENCY WILL BE REQUIRED TO PREPARE TEST CYLINDERS AND PROVIDE THE BREAK RESULTS OF SAID CYLINDERS TO THE CITY INSPECTOR. A MINIMUM OF ONE (1) SET PER POUR PER DAY IS REQUIRED. POURS IN EXCESS OF FIFTY (50) CUBIC YARDS REQUIRE ONE (1) SET PER FIFTY (50) CUBIC YARDS OR FRACTION THEREOF.

THE CITY OF ALPHARETTA GEORGIA

BY	REVISION	DATE

ROADWAY PAVEMENT SPECIFICATIONS, CURB AND GUTTER DETAILS

08/01/2015

STD. 901

TYPICAL LOCATIONS FOR CURB CUT RAMPS – PLAN VIEW

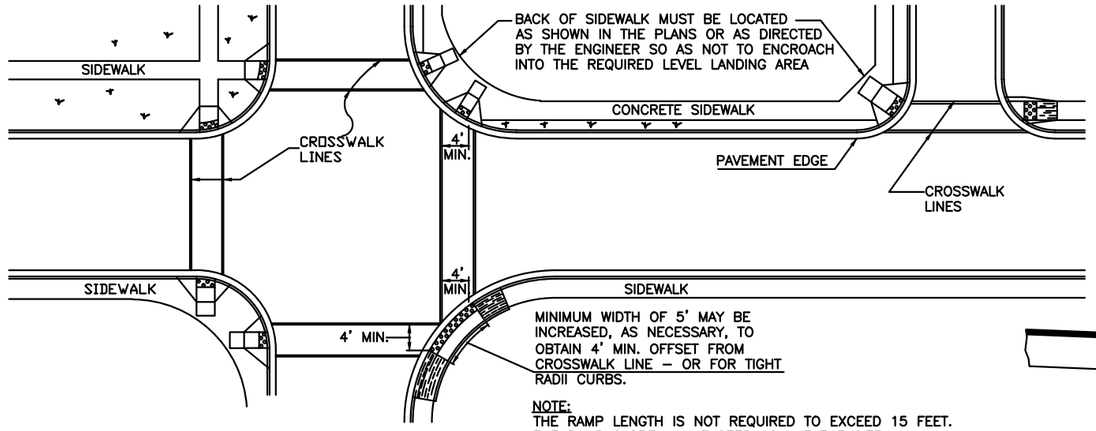

NOTE:
THE RAMP LENGTH IS NOT REQUIRED TO EXCEED 15 FEET. THE RAMP SLOPE MAY EXCEED 12:1 IF THE SITE CONDITIONS PREVENT THE USE OF A RAMP 15 FEET LONG.

CONCRETE SIDEWALK DETAILS

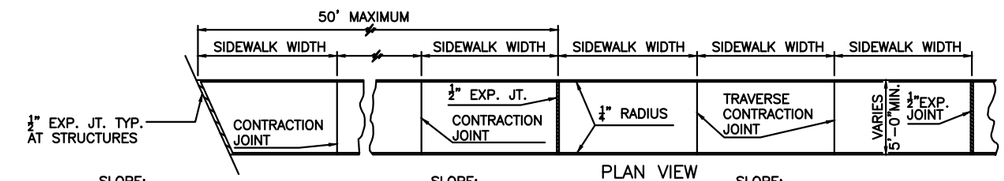

PLAN VIEW

GUTTER TRANSITION DETAIL

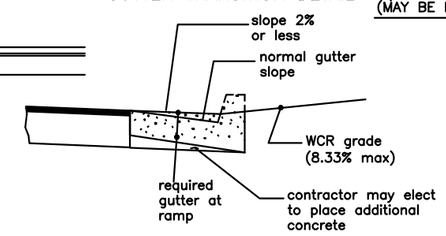

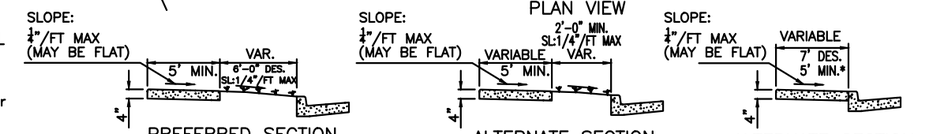

PREFERRED SECTION WITH 6' GRASS STRIP

* 16' SHOULDER RECOMMENDED WITH THIS INSTALLATION

ALTERNATE SECTION WITH GRASS STRIP

ALTERNATE SECTION WITHOUT GRASS STRIP

*5' MIN WIDTH WITH NO OBSTRUCTIONS (MAILBOXES, SIGNS, ETC)

7' PREFERRED WIDTH WITH A 2' AREA OF CONTRASTING COLOR & TEXTURE ADJACENT TO THE CURB.

Type A

(The Preferred Ramp)

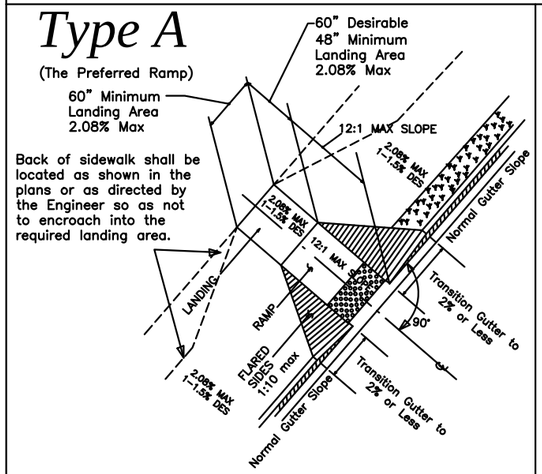

Type B

(Normally used when space is not available for a landing at the top of a Type A Ramp)

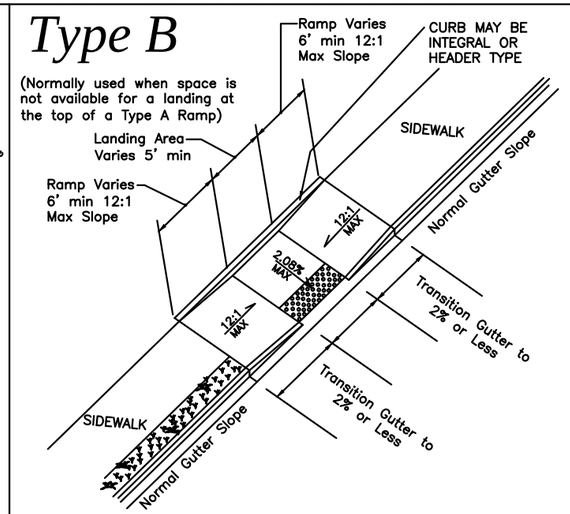

Type D

(Normally used when the sidewalk ties directly into the crosswalk)

IN AREAS WHERE THE GUTTER HAS A SLOPE 1" IN 1' END NORMAL GUTTER SLOPE AT A DISTANCE OF 6 TO 10 FEET FROM THE RAMP AND BEGIN TRANSITION TO A FLAT GUTTER SLOPE. NORMAL GUTTER SLOPE SHALL BE RESUMED AT A SIMILAR DISTANCE BEYOND THE RAMP.

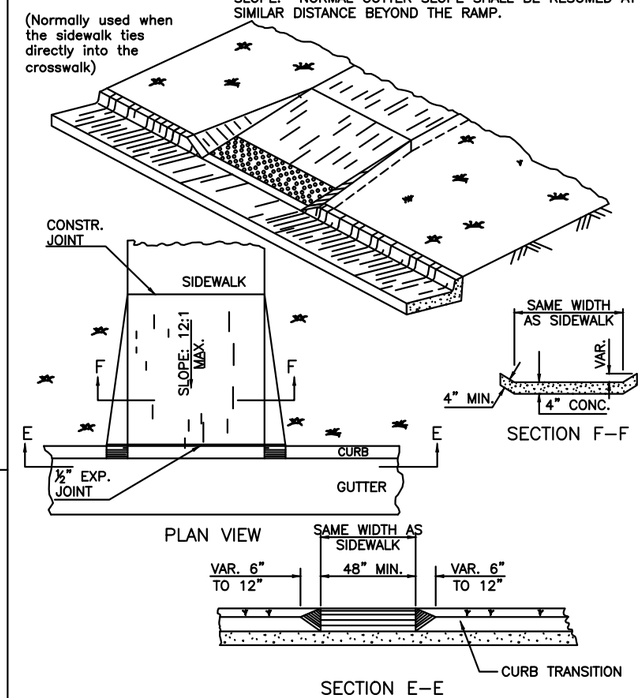

NOTES FOR CONCRETE SIDEWALKS:

1. CONCRETE SHALL BE 3000 P.S.I. OR STRONGER.
2. CONCRETE SHALL BE PLACED 4" THICK AND FINISHED WITH TAMPS, WOOD FLOATS AND STIFF–BRISTLE BROOMS.
3. TRANSVERSE CONTRACTION JOINTS SHALL BE PLACED INTERVALS EQUAL TO THE WIDTH OF THE SIDEWALK. ALL EDGES TO BE ROUNDED TO 1/4" RADIUS.
4. 1/2" EXPANSION JOINTS SHALL BE PLACED WHERE SIDEWALKS TIE INTO A STRUCTURE OR TERMINATE AT CURB, RAMPS OR DRIVEWAYS, POUR BREAKS AND AT 50' INTERVALS.
5. ALL SIDEWALKS AND CURB CUT RAMPS WITHIN PUBLIC RIGHTS–OF–WAY MUST BE INSPECTED PRIOR TO ISSUANCE OF THE CERTIFICATE OF OCCUPANCY. CONTACT CITY INSPECTOR A MINIMUM OF 72 HOURS IN ADVANCE TO SCHEDULE AN INSPECTION AT 678–297–6200.

NOTES FOR CURB CUT RAMPS:

1. CURB CUT RAMPS WILL BE LOCATED AS FOLLOWS UNLESS PLANS SPECIFY OTHERWISE.
   a) AT ALL PEDESTRIAN CROSSWALKS WHERE CURB IS CONSTRUCTED OR REPLACED.
   b) WHERE THE SIDEWALK, CONCRETE OR UNPAVED, IS INTERRUPTED BY THE CURB AT TURNOUTS OR AT INTERSECTIONS.
   c) AT OTHER LOCATIONS SUCH AS HOSPITALS, NURSING HOMES, REST AREAS, ETC., WHERE THE CURB WOULD OTHERWISE BE AN OBSTRUCTION TO THE PHYSICALLY DISABLED.
2. RAMPS WILL BE CONSTRUCTED FROM CONCRETE. SPECIFICATIONS FOR RAMP WILL BE THE SAME AS FOR CONCRETE SIDEWALK. RAMPS SHALL HAVE EITHER A ROUGH OR A TEXTURED FINISH.
3. DROP INLETS ARE NOT TO BE LOCATED DIRECTLY IN FRONT OF RAMPS. CATCH BASINS SHOULD BE LOCATED AT LEAST 10 FT. FROM RAMPS WHEN FEASIBLE.
4. WHERE RAMPS ARE LOCATED IN RADII, THE DIMENSIONS SHOWN FOR RAMP WIDTHS AND TAPERS ARE MEASURED PERPENDICULAR TO THE RAMP AND NOT ALONG THE CURVE.
5. WHERE UTILITY STRUCTURES CONFLICT, WHERE SIDEWALK GEOMETRY VARIES, AT SKEWED INTERSECTIONS, OR IN OTHER SPECIAL CASES, THE RAMP DESIGNS MAY BE MODIFIED BY THE DESIGNER OR ENGINEER, PROVIDED THAT THE WIDTH REMAINS A MINIMUM OF 48 INCHES, AND NO SLOPE ON THE A CCESSIBLE PART OF THE RAMP IS STEEPER THAN 12:1.
6. WHEN A CURB RAMP IS PLACED ON EXISTING PAVEMENT, THE PAVEMENT SHALL BE REMOVED TO PROVIDE A MINIMUM THICKNESS OF 3 INCHES OF CONCRETE AT ALL LOCATIONS.
7. ALL CURB CUT RAMPS SHALL INCORPORATE DETECTABLE WARNING SURFACES PER GEORGIA DEPARTMENT OF TRANSPORTATION SPECIAL DETAIL A4.

Type C

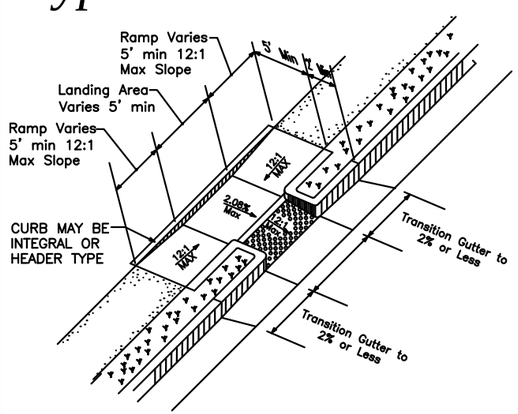

Skewed Ramp Details

(Applies to Type A & Type D Ramps Only)

WHEN THE RAMP CENTERLINE IS NOT PERPENDICULAR TO THE CURB A LEVEL LANDING AREA WITH SLOPES LESS THAN 2.08% MUST BE PROVIDED AT THE BOTTOM OF THE RAMP.

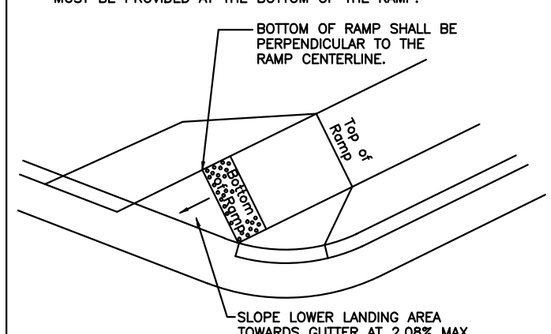

THE CITY OF ALPHARETTA GEORGIA

BY	REVISION	DATE

CONCRETE SIDEWALK DETAILS, CURB CUT RAMP DETAILS

08/01/2015

STD. 902

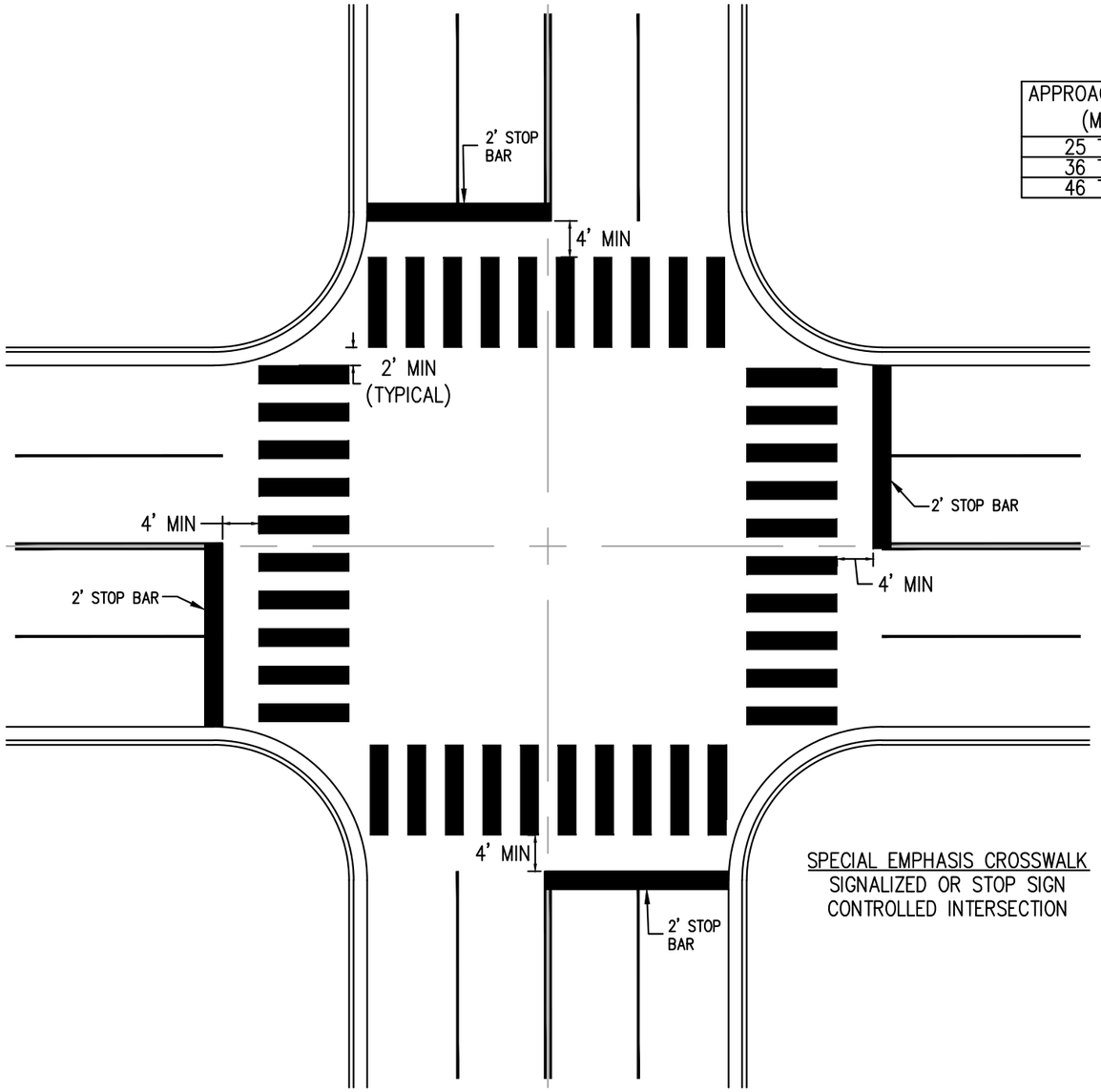

SPECIAL EMPHASIS CROSSWALK
SIGNALIZED OR STOP SIGN CONTROLLED INTERSECTION

SPECIAL EMPHASIS CROSSWALK
NTS

APPROACH SPEED (MPH)	A* SUGGESTED DISTANCE (FT)
25 TO 35	275
36 TO 45	350
46 TO 55	500

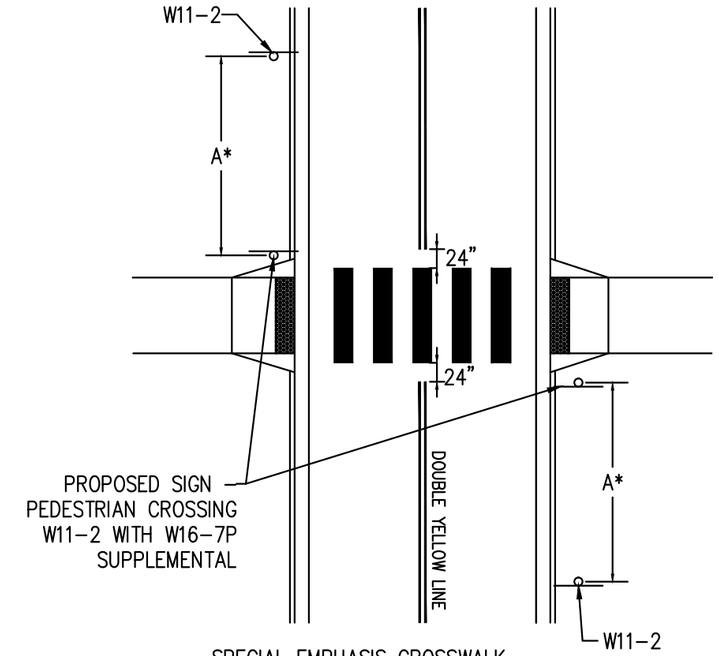

SPECIAL EMPHASIS CROSSWALK
MIDBLOCK CROSSING
TWO LANE, NON-SIGNALIZED

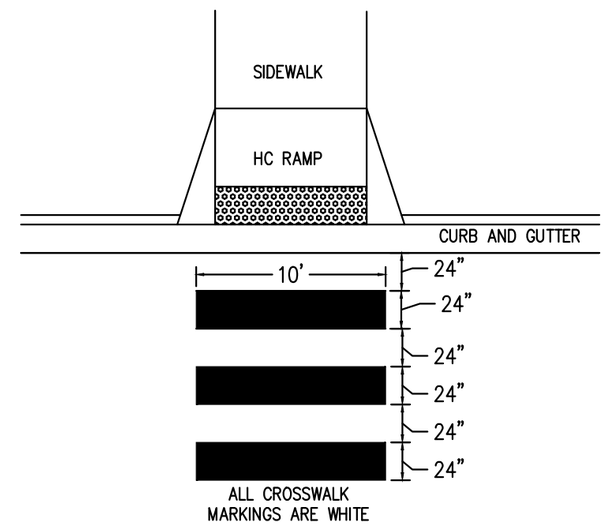

THE CITY OF ALPHARETTA GEORGIA

BY	REVISION	DATE

CROSSWALK
SPECIAL EMPHASIS

08/01/2015

STD. 903

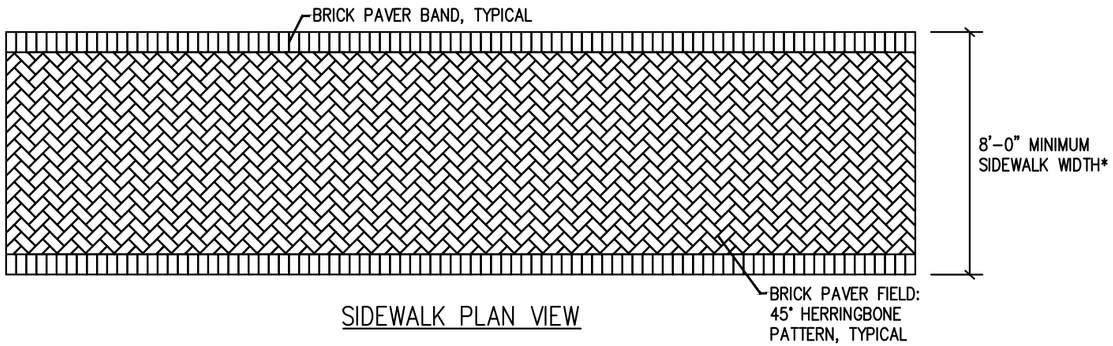

SIDEWALK PLAN VIEW

* SIDEWALK WIDTHS LESS THAN 8' REQUIRE APPROVAL BY COMMUNITY DEVELOPMENT DEPARTMENT.

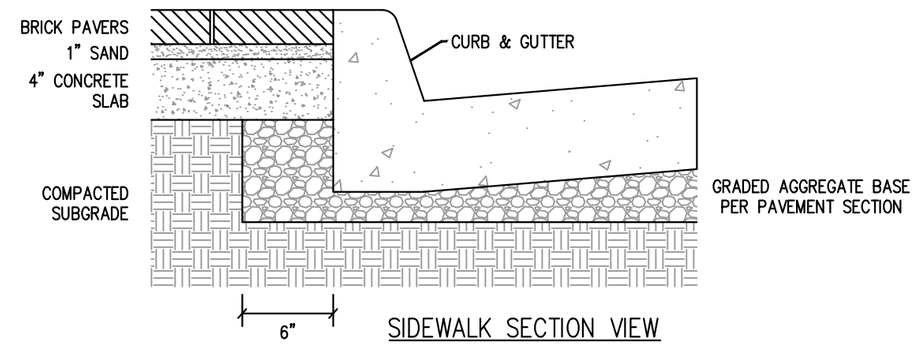

SIDEWALK SECTION VIEW
ADJACENT TO CURB

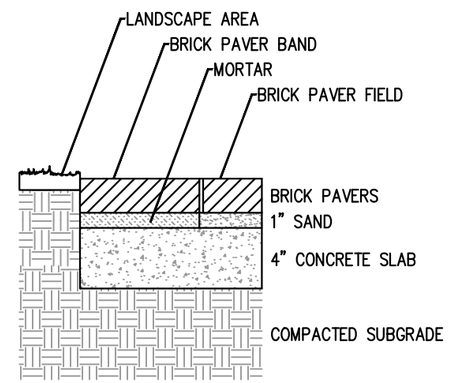

SIDEWALK SECTION VIEW
ADJACENT TO LANDSCAPE

BRICK SIDEWALK NOTES:

1. UNIT CLAY PAVER SHALL CONFORM TO ASTM SPECIFICATION STANDARDS C902, CLASS SX, TYPE 1, APPLICATION PX.
2. UNITS SHALL BE 4" X 8" X 2-1/4" SIZE HAVING SQUARE EDGES, 10,000 PSI MINIMUM COMPRESSIVE STRENGTH AND BELOW 6% COLD WATER ABSORPTION.
3. PAVER COLORS SHALL BE A 60/40 MIX OF 60% PATHWAY FULL RANGE AND 40% PATHWAY COCOA BRICK PAVERS AS MANUFACTURED BY PINE HALL BRICK CO., INC., WINSTON-SALEM, NORTH CAROLINA OR APPROVED EQUALS.
4. DETECTABLE WARNING STRIPS SHALL BE 12" X 12" GEORGIA GREY GRANITE TRUNCATED DOME TILES AS MANUFACTURED BY COLD SPRING GRANITE COMPANY, COLD SPRING, MINNESOTA OR APPROVED EQUAL.
5. CONCRETE SLAB SHALL BE CONSTRUCTED PER CITY OF ALPHARETTA STANDARD DETAIL 902 – CONCRETE SIDEWALK DETAILS
6. BRICK PAVER BANDS ADJACENT TO LANDSCAPE AREAS SHALL BE SET IN MORTAR. BRICK PAVER BAND SHALL BE FLUSH WITH ADJACENT BRICK PAVER FIELD.

THE CITY OF ALPHARETTA GEORGIA

BY	REVISION	DATE

BRICK PAVER SIDEWALK DETAIL FOR DOWNTOWN ALPHARETTA

08/01/2015

STD. 904

CURB AND GUTTER

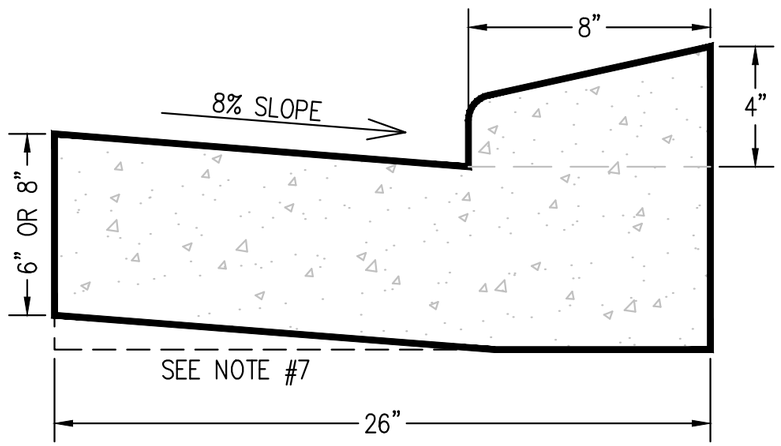

HEADER CURB

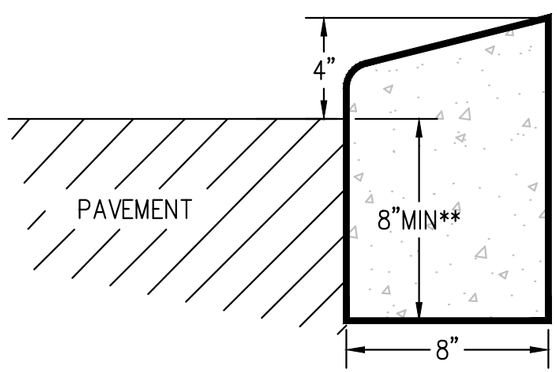

** THE CURB DEPTH MAY BE INCREASED AT CONTRACTOR'S OPTION SO BOTTOM OF HEADER CURB WILL ALIGN WITH BOTTOM OF PAVEMENT SECTION.

MOUNTABLE CURB NOTES:

1. ½" PRE-FORMED EXPANSION JOINTS REQUIRED AT ALL STRUCTURES AND RADIUS POINTS.
2. 50' MAXIMUM DISTANCE BETWEEN EXPANSION JOINTS.
3. 10' MAXIMUM DISTANCE BETWEEN CONTRACTION JOINTS.
4. CONCRETE STRENGTH TO BE 3000 P.S.I. WITH A MAXIMUM SLUMP OF 2".
5. CONCRETE FINISH SHALL BE SMOOTHED AND EVENED WITH A WOODEN FLOAT.
6. G.A.B. SHALL EXTEND A MINIMUM OF 6" BEYOND BACK OF CURB.
7. GUTTER THICKNESS SHALL BE 6" WHEN USED WITH TYPE I OR TYPE II PAVEMENT SECTIONS, PER CITY OF ALPHARETTA STANDARD DETAIL 900. GUTTER THICKNESS SHALL BE 8" WHEN USED WITH TYPE III PAVEMENT SECTION, PER CITY OF ALPHARETTA STANDARD DETAIL 900.
8. AT CONTRACTOR'S OPTION, THE GUTTER THICKNESS MAY BE INCREASED AT EDGE OF PAVEMENT TO MAKE BOTTOM OF GUTTER PARALLEL WITH PAVING OF BASE COURSE, BUT THE GUTTER THICKNESS MUST NOT BE LESS THAN THE SPECIFIED 8" AT ANY POINT.
9. DURING CONSTRUCTION, THE CONTRACTOR'S MATERIALS TESTING AGENCY WILL BE REQUIRED TO PREPARE TEST CYLINDERS AND PROVIDE THE BREAK RESULTS OF SAID CYLINDERS TO THE CITY INSPECTOR. A MINIMUM OF ONE (1) SET PER POUR PER DAY IS REQUIRED. POURS IN EXCESS OF FIFTY (50) CUBIC YARDS REQUIRE ONE (1) SET PER FIFTY (50) CUBIC YARDS OR FRACTION THEREOF.

CURB FACE DESIGN

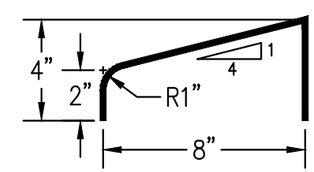

THE CITY OF ALPHARETTA GEORGIA

BY	REVISION	DATE

MOUNTABLE CURB DETAILS

06/24/2020

STD. 905

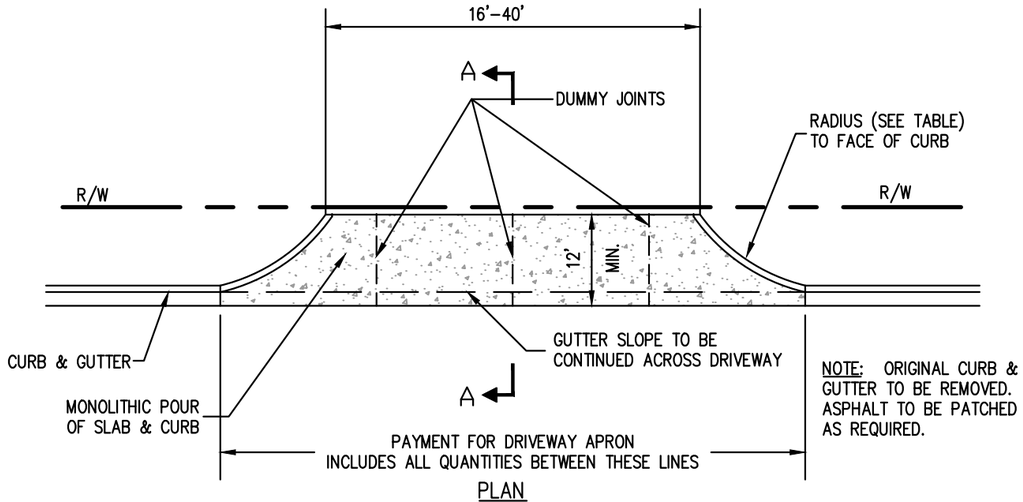

NOTE: ORIGINAL CURB & GUTTER TO BE REMOVED. ASPHALT TO BE PATCHED AS REQUIRED.

PLAN
N.T.S.

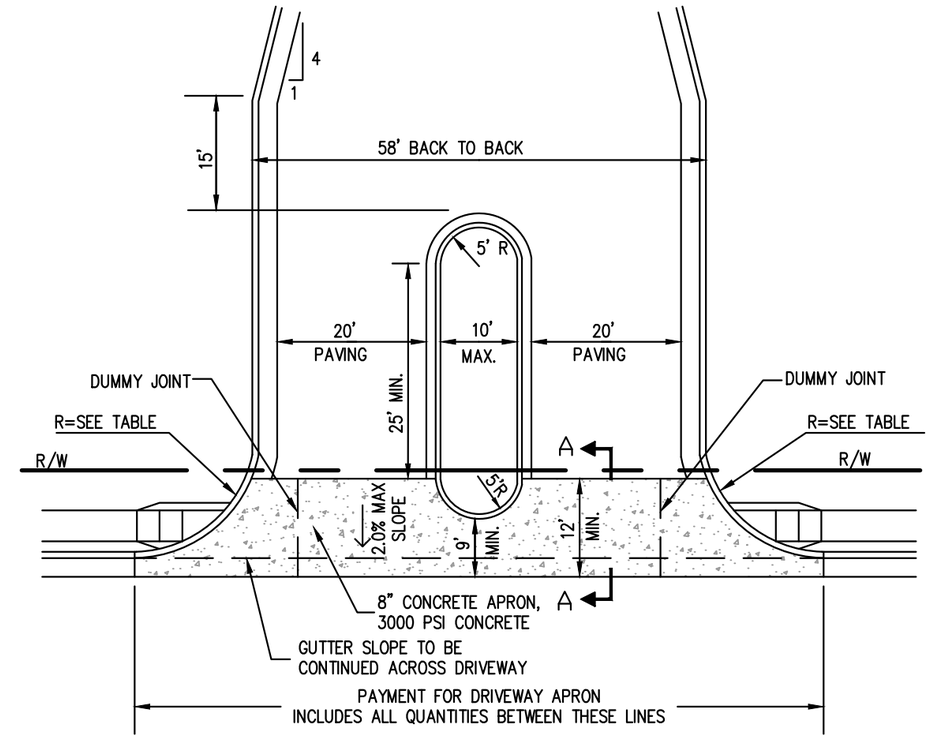

OPTIONAL DIVIDED ENTRANCE PLAN
N.T.S.

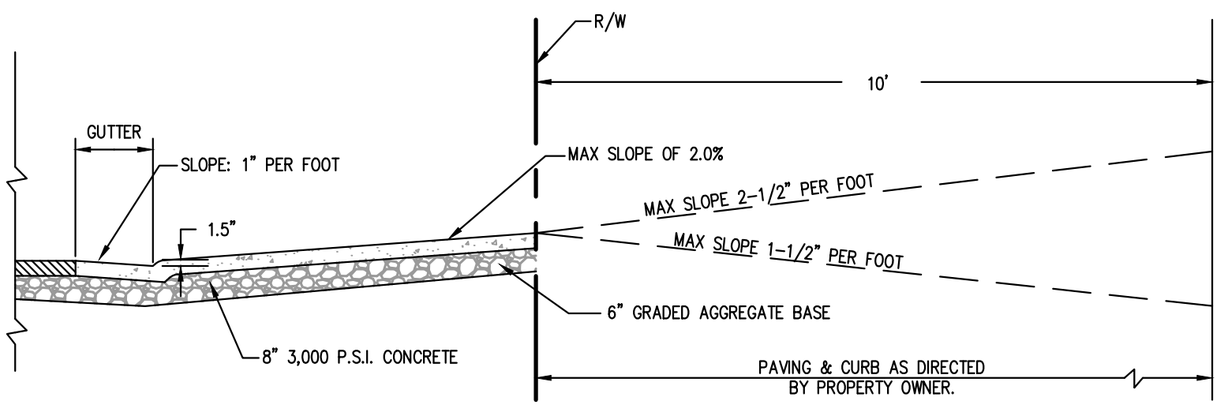

SECTION A–A
N.T.S.

DRIVEWAY RADII (MIN)

INDUSTRIAL & COMMERCIAL		LIGHT COMMERCIAL	
WIDTH	RADIUS	WIDTH	RADIUS
20' – 40'	25'	20' – 30'	25'
		30' – 40'	15'

NOTE:
RESIDENTIAL DRIVEWAYS SHALL COMPLY WITH GEORGIA DEPARTMENT OF TRANSPORTATION SPECIAL DETAIL A1.

THE CITY OF ALPHARETTA GEORGIA

BY	REVISION	DATE

DRIVEWAY DETAILS

08/01/2015

STD. 951